VRT RENEGADE™

SUMMERS®

Operator's Manual

VRT RENEGADE™

VARIABLE RATE TILLAGE

IMPORTANT

THE OPERATOR IS RESPONSIBLE FOR ADJUSTING THE MACHINE SINCE MACHINE DOES NOT COME "FIELD READY" FROM FACTORY.

CAUTION

READ & UNDERSTAND OPERATOR'S MANUAL BEFORE USING MACHINE.

See www.summersmfg.com for latest version of all Summers Operator's Manuals.

SUMMERS MANUFACTURING CO., INC.

WEB SITE: www.summersmfg.com

DEVILS LAKE, NORTH DAKOTA 58301 (701) 662-5391

VRT RENEGADE™

8Z1065B

© Summers Mfg. Co., Inc. 2024

Printed in USA

Warranty

Summers warrants only products of its manufacture against operational failure caused by defective materials or workmanship which occur during normal use within 36 months from the date of purchase by the end user from Summers' dealer.

Summers' obligation is to replace free of charge any part of any product that Summers inspection shows to be defective excluding transportation charges to Devils Lake, ND and return and also excluding all transportation costs from Summers' dealer to the dealer's customer and all other costs such as removal and installation expense.

Summers shall not be liable for loss of time, manufacturing costs, labor, material, loss of profits, consequential damages, direct or indirect, because of defective products whether due to the rights arising under the contract of sale or independently thereof, and whether or not such claim is based on contract, tort or warranty.

Written permission for any warranty claim return must be first obtained from authorized Summers personnel. All returns must be accompanied with a complete written explanation of claimed defects and the circumstances of operational failure.

Written warranty for all component parts used in the manufacture of Summers products is available upon request. Warranty of such component parts will be determined by said component manufacturer upon their inspection of the claimed defective part.

This express warranty is the sole warranty of Summers. There are no warranties, which extend beyond the warranty herein expressly set forth. The sales for products of Summers under any other warranty or guarantee express or implied is not authorized. This warranty voids all previous issues.

SUMMERS MANUFACTURING CO., INC.

DEVILS LAKE, NORTH DAKOTA 58301

01/16

Publish Date: 10/15/2026

GENERAL INFORMATION

This book is composed of four basic sections: Safety, Assembly, Operation and Maintenance, and Parts. The Assembly Section provides complete instructions for the proper assembly of your Summers VRT Renegade™. The Operation Section provides information for the proper operation and maintenance of your Summers VRT Renegade™. A complete parts breakdown is provided in the Parts Section.

Parts are referenced in each drawing with the Summers Manufacturing Part Number. Use this Part Number when ordering replacement parts from your Summers dealer. See back section of manual for description of each Part Number.

Reference to “Right” and “Left” in this book is determined when the machine is viewed from the rear.

It is the policy of this company to improve its products whenever possible and practical to do so. We reserve the right to make changes or improvements in the design or construction of parts at any time without incurring the obligation to install such changes on products previously delivered.

Summers Manufacturing Company, Inc. strongly recommends that each Operator READ and UNDERSTAND the Operator’s Manual before using the machine. In addition, this Operator’s Manual should be REVIEWED at least ANNUALLY thereafter.

Scan code to the right for the latest version of all Summers Operator’s Manuals.

SECTION CONTENTS

Section 1: **SAFETY**

Section 2: **ASSEMBLY INSTRUCTIONS**

Section 3: **OPERATION, MAINTENANCE AND SPECIFICATIONS**

Section 4: **PARTS**

OWNER REGISTER

Name_____ Size_____

Address_____ Serial Number_____

City_____ (located by the hitch piece)

Stat/Prov._____ Date Purchased_____

Mail Code_____ Dealer_____

TABLE OF CONTENTS

SECTION 1 – SAFETY

SAFETY ALERT SYMBOL & GENERAL SAFETY PRACTICES…….……[1.1]

SAFETY DURING TRANSPORT……...……[1.2]

SAFETY DECALS……[1.2]-[1.6]

SECTION 2 – ASSEMBLY

FINAL ASSEMBLY OF SETUP MACHINE…….…[2.1]-[2.2]

MOUNTED ATTACHMENT ASSEMBLY……..…..[2.3]-[2.9]

SECTION 3 – OPERATION, MAINTENANCE AND SPECIFICATIONS

CONNECTING TO THE TRACTOR……..[3.1]

PREPARING FOR FIELD OPERATION……..[3.2]

TABLET SETUP/SOIL CONTROL APP……..……..……..…[3.3-3.10]

CALIBRATION……...…[3.11-3.15]

SWITCHBOX…….[3.16-3.17]

FIELD OPERATION……...…[3.18]

TRANSPORT……..……....[3.19]

DISCONNECTING FROM TRACTOR……....[3.19]

STORAGE…….……..…[3.19]

MAINTENANCE…….……..…..[3.20]

TROUBLESHOOTING…….....[3.21-3.23]

MACHINE SPECIFICATIONS……..……....[3.23]

SENSOR REPLACEMENT……..…….[3.24]

SECTION 4 – PARTS

25’-30’ MACHINES…..……..……[4.1-4.12]

35’40’ MACHINES…….……[4.13-4.24]

DECALS……..……...…[4.25-4.26]

BLADE MODULES……...…….[4.27-4.28]

HYDRAULIC BLOCKS…….[4.29-4.30]

MOUNTING ARM/ATTACHMENTS……...…….[4.31-4.36]

DEFLECTOR ARM……..…….[4.37-4.38]

HUBS/AXLES…….....[4.39-4.42]

ACRE METER……..……[4.43]
HYDRAULIC LAYOUTS…….....[4.44]-[4.60]
HYDRAULIC CARTRIDGES……[4.61-4.63]

TRANSPORT SAFETY

1. Road speed should not exceed 20 mph (32 km/hr).

2. Do not tow if the implement's towing vehicle ratio is greater than 1.5:1. See Specifications Section for implement weights.
3. If more than one implement is to be pulled by a towing vehicle, it is recommended that each implement is to be a maximum of 50% of the weight of the preceding implement. If it is not possible to reach this weight limit, transport the implements separately.
4. When approaching rough roads/ground (such as entering a road), slow down to a safe driving speed.
5. Check all lights and reflectors to ensure ALL regulations are met. Make sure the SMV emblem is attached to the implement and is clearly visible from the rear.

   SMV emblems are only attached to vehicles traveling slower than 25 mph (40 km/hr). The most hazardous conditions to drive in are a daybreak and dusk. The use of a pilot car is recommended.
6. Always install ALL safety locks before transporting an implement.
7. Always park implements on a firm, level surface.

SAFETY-ALERT SYMBOL

This symbol is used to denote possible danger and

Care should be taken to prevent bodily injury.

This symbol means:

ATTENTION! BECOME ALERT!

YOUR SAFETY IS INVOLVED!

Definition of each **Signal Word** used in conjunction with the **Safety-Alert** symbol.

Indicates an imminently hazardous situation which, if not avoided, will result in death or serious injury. This signal word is limited to the most extreme situations.

Indicates a potentially hazardous situation which, if not avoided, could result in death or serious injury.

Indicates a potentially hazardous situation which, if not avoided, may result in minor or moderate injury. It may also be used to alert against unsafe practices.

GENERAL SAFETY PRACTICES

1. READ AND UNDERSTAND Operator's Manual before using machine. Review at least annually thereafter.
2. VERIFY all safety devices and shields are in place before using machine.
3. KEEP hands, feet, hair and clothing away from moving parts.
4. STOP engine, place all controls in neutral, set parking brake, remove ignition key and wait for all moving parts to stop before servicing, adjusting or maintaining.
5. USE CYLINDER LOCKS or lower hydraulically elevated implement components.
6. BE CAREFUL when working around high pressure hydraulic system.
7. DO NOT ALLOW RIDERS.
8. EXERCISE EXTREME CARE when working on or near disk blades. Samurai™ blades are extremely sharp, especially when new.

SAFETY DURING TRANSPORT

1. ONLY TOW at a safe speed. Use caution when making corners and meeting traffic. Maximum transport speed is 20 mph (32 kph). Towing vehicle must weigh a minimum of 1.5x the weight of the implement. (See table on page 3.23)
2. USE safety chain between tractor drawbar and implement hitch when transporting on public roads.
3. ALWAYS use transport locks when transporting on public roads.
4. COMPLY with local lighting, marking and oversize regulations when transporting on highways.
5. FREQUENTLY check for traffic from rear, especially during turns.

SAFETY DECALS

1. Keep safety decals clean.
2. Replace missing or unreadable decals. New decals are available from your Summers dealer by ordering correct part number (PN) located on decal.
3. Locations shown in Parts section.

1. TRANSPORT LOCK WARNING DECAL (PN 8Z0075)

2. PINCH POINT DECAL (PN 8Z0087)

3. DISCONNECTING IMPLEMENT WARNING DECAL (PN 8Z0099)

4. REAR JACK DECAL (PN 8Z0102)

5. GENERAL CAUTION DECAL (PN 8Z0276)

6. REPHASING CYLINDERS DECAL (PN 8Z0340)

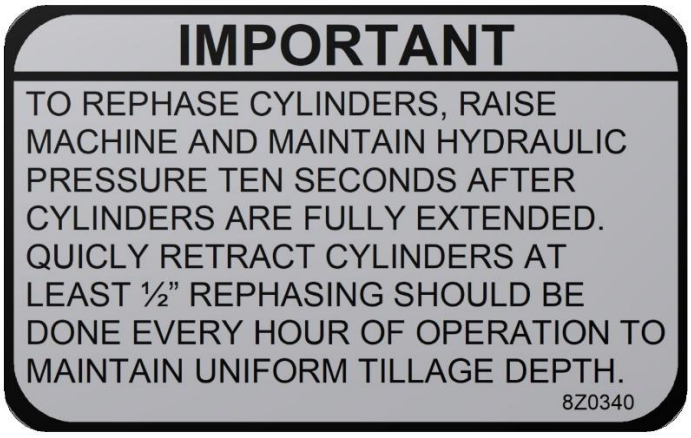

7. INSTALLING CYLINDER LOCKS DECAL (PN 8Z0342)

8. STAYING CLEAR OF WINGS DECAL (PN 8Z0344)

9. ROLLING ATTACHMENT DANGER DECAL (PN 8Z0345)

10. ELECTROCUTION DANGER DECAL (PN 8Z0346)

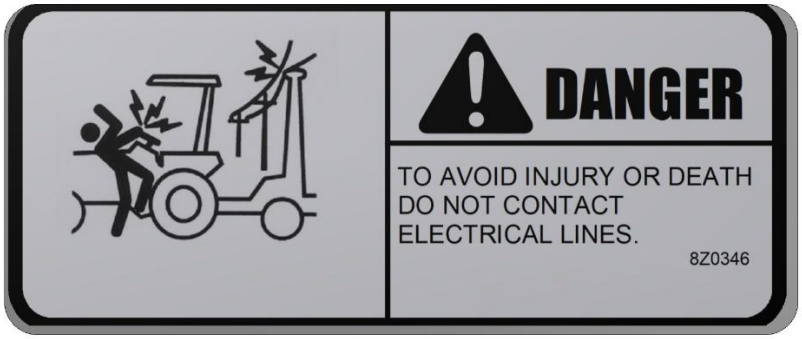

11. AMBER REFLECTOR (PN 8Z0800)

12. RED-ORANGE REFLECTOR (8Z0805)

13. RED REFLECTOR (PN 8Z0810)

SAFETY LIGHT OPERATION

The Summers Safety Light Kit is equipped with a 7-pin connector which meets SAE J560 specification. To protect 7-pin connector, store in dust cap (PN 8K8067) when not attached to towing vehicle.

The Summers VRT Renegade™ is shipped in 2 ways: Completely assembled, and partially assembled. If your machine is completely assembled, this section does not apply. If your machine is partially assembled, this section will show how to finish assembly (attach hitch and mounted attachments).

HITCH

- Attach hitch to frame as shown
- Connect cylinders to hitch
- Attach 8N0200 to hitch using 8X1115 and 8X0203
- Attach sensor linkage mount to rear side of hitch
- Insert cylinder stops on hitch cylinders for transport

Part Number	Qty
8D8523	1
8K9174	2
8K9180	2
8P3910	2
8T2040	2
8X0066	2
8X0095	2
8X0203	2
8X0246	2
8X0253	2

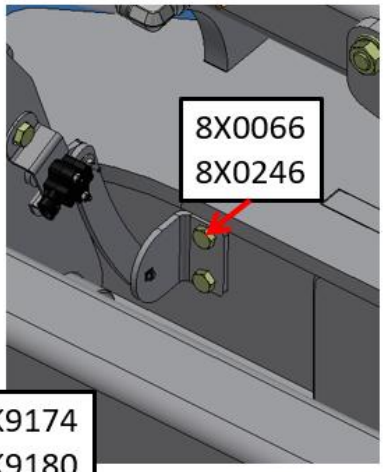

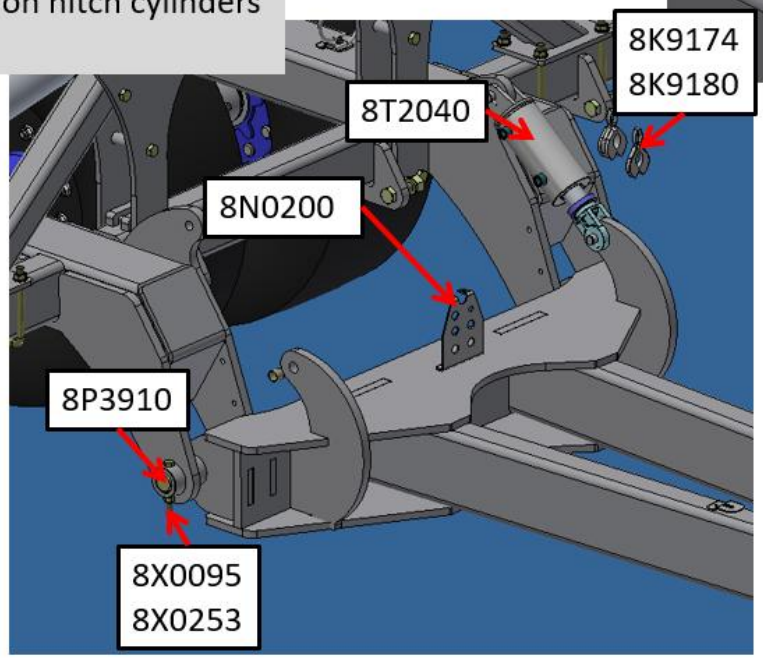

HITCH ATTACHMENTS

- Bolt 8N0700 to the frame
- Then attach 8Z1010 and 8K8067
- **35-40:** 8D0770 **25-30:** 8D0760

Part Number	Qty
8D0760	1
8D2480	1
8N0700	1
8N0703	1
8N0705	1
8X0021	3
8X0110	1
8X0146	4
8X0203	4
8X0211	3
8X0281	4
8X0318	1
8X0329	3
8X1110	4
8Z1010	1

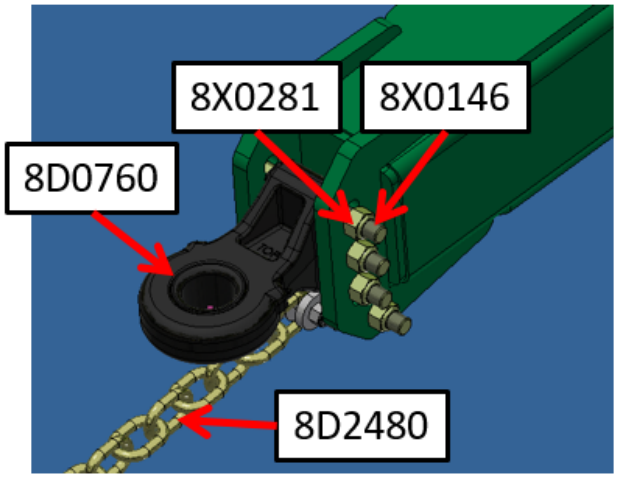

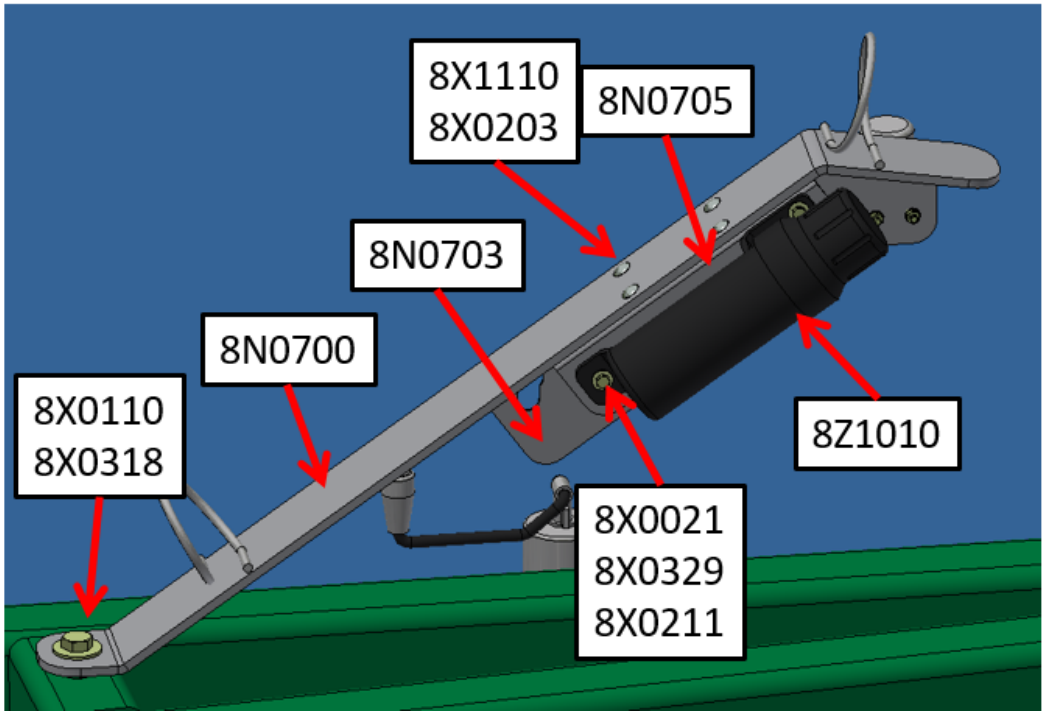

ATTACHMENT BRACKET ASSEMBLY

- First attach 8H3000 to the frame
- Then attach 8H3020, 8H3020, 8H1290, and 8B1750 to 8H3000

Part Number	Qty per Bracket
8B2175	1
8C1755	2
8H1290	1
8H2005	2
8H3000	1
8H3010	1
8H3020	1
8X0116	4
8X0260	4
8X0261	4
8X0306	4

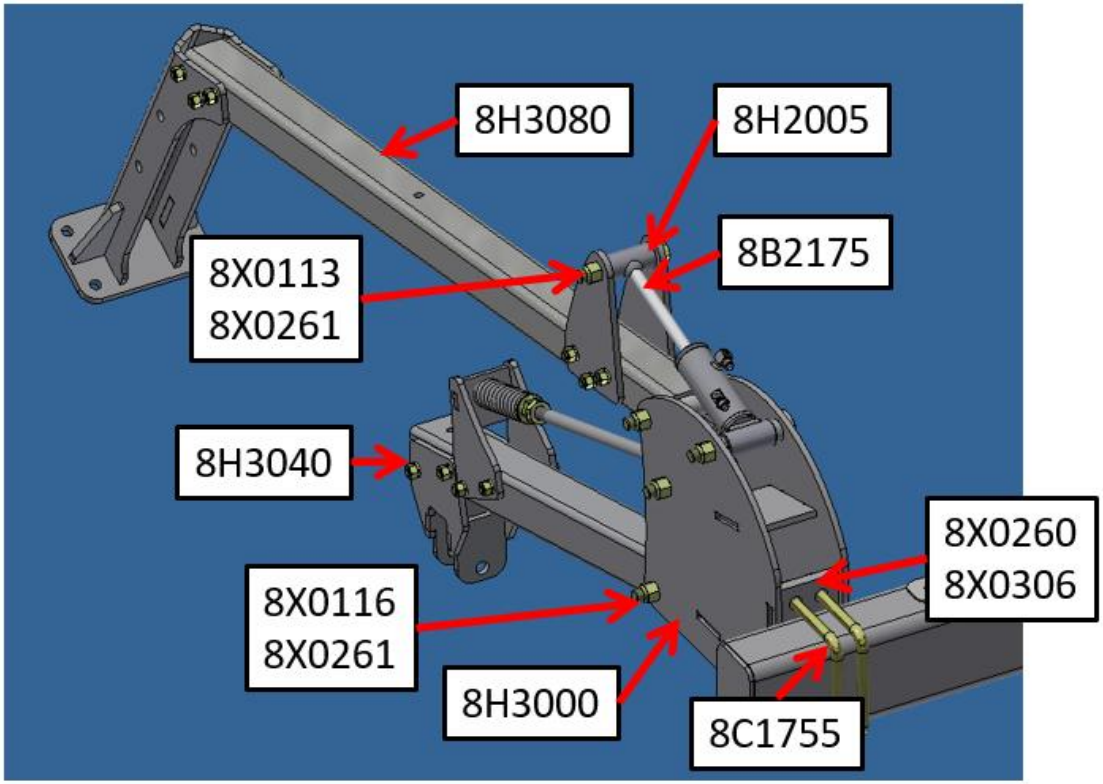

ATTACHMENT BRACKET ASSEMBLY

Part Number	Qty per Bracket
8H1290	1
8H1295	1
8X0271	1
8X0269	1
8X0274	1

- Tighten 8X0271 so there is ¾” between the nut and the end of the spring rod

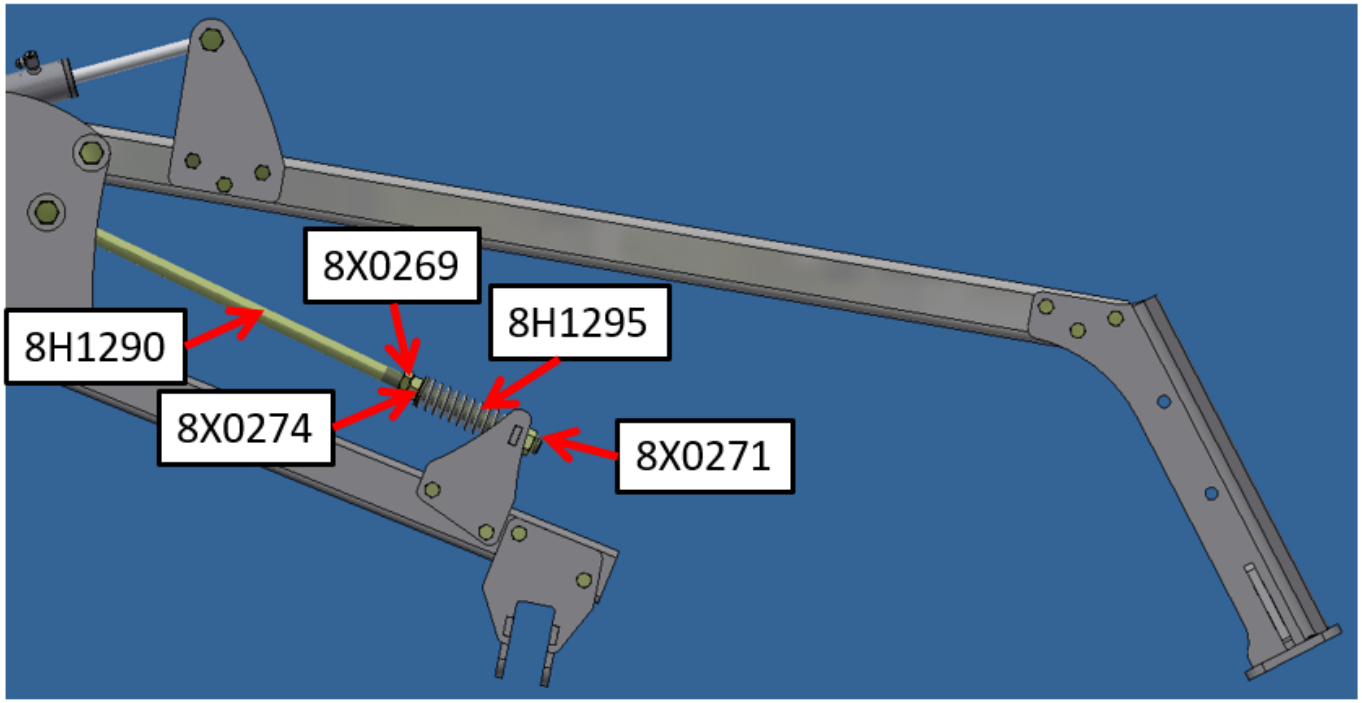

BASKET LOCKUP

- Arms on Center Section **ONLY**

Part Number	Qty per Bracket
8H3025	1
8H3028	1
8X0317	1
8X0492	1

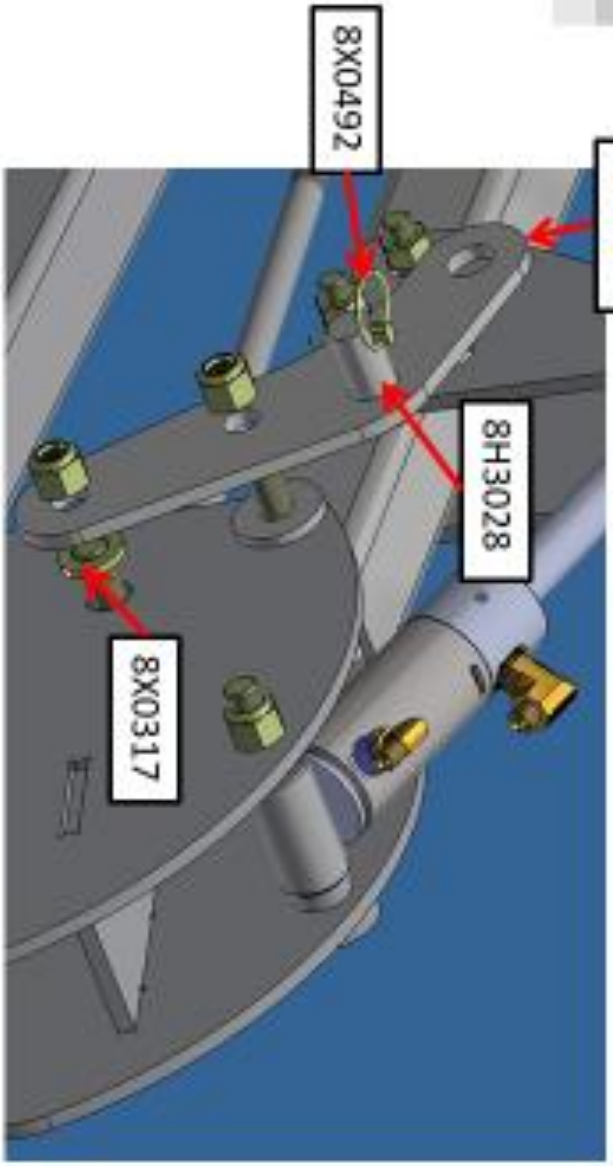

HARROW/BASKET LAYOUT (25')

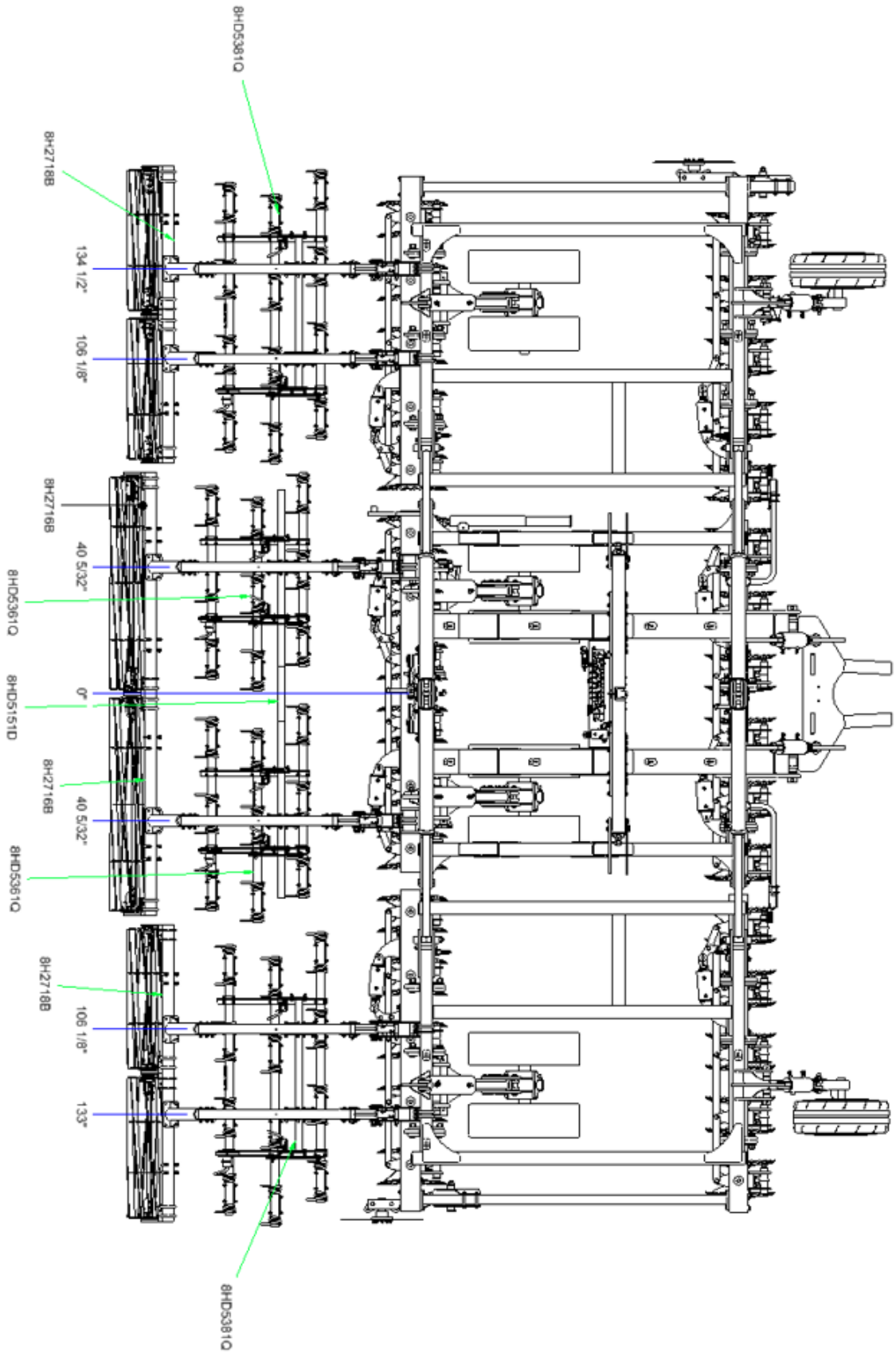

HARROW/BASKET LAYOUT (30')

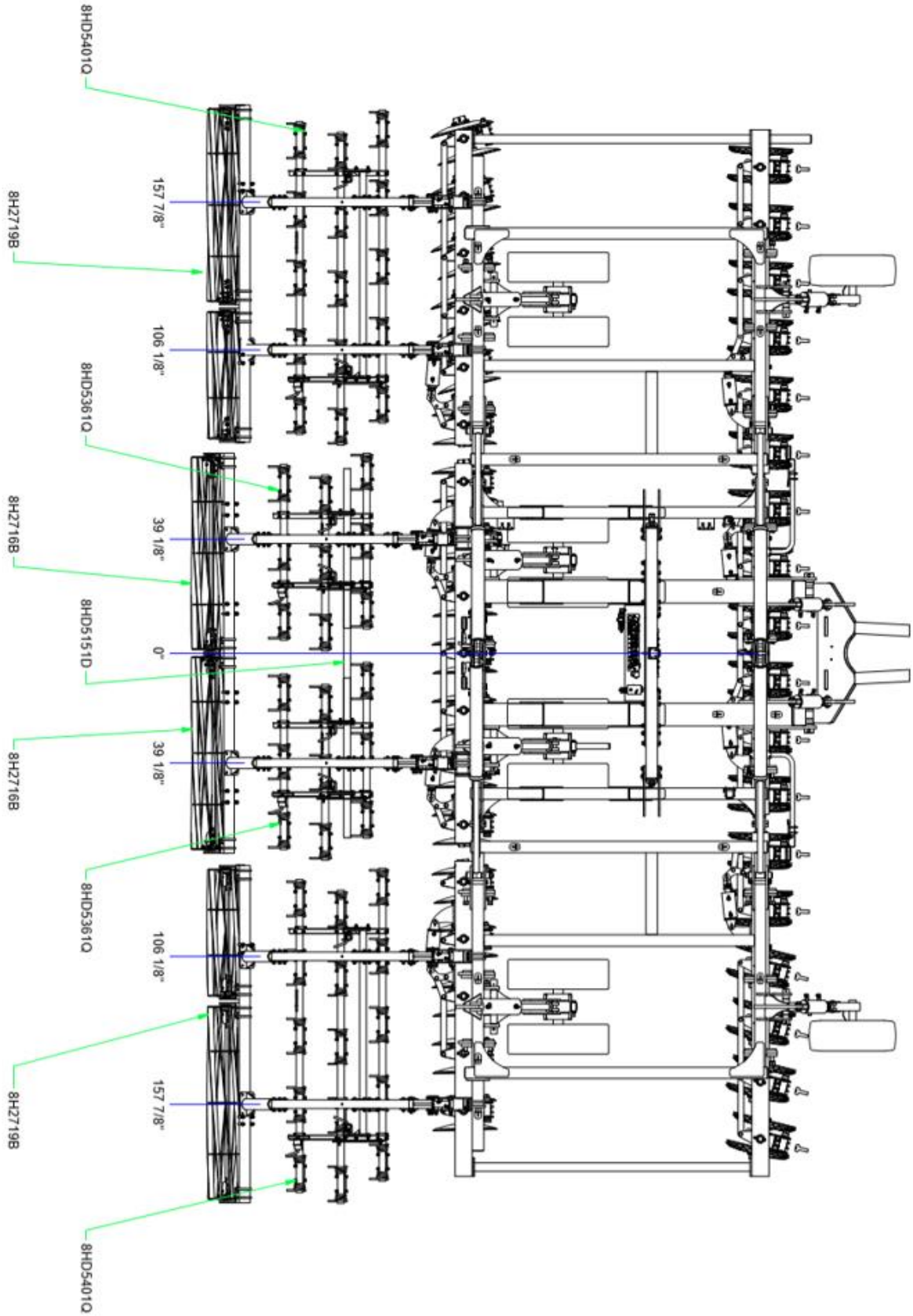

HARROW/BASKET LAYOUT (35')

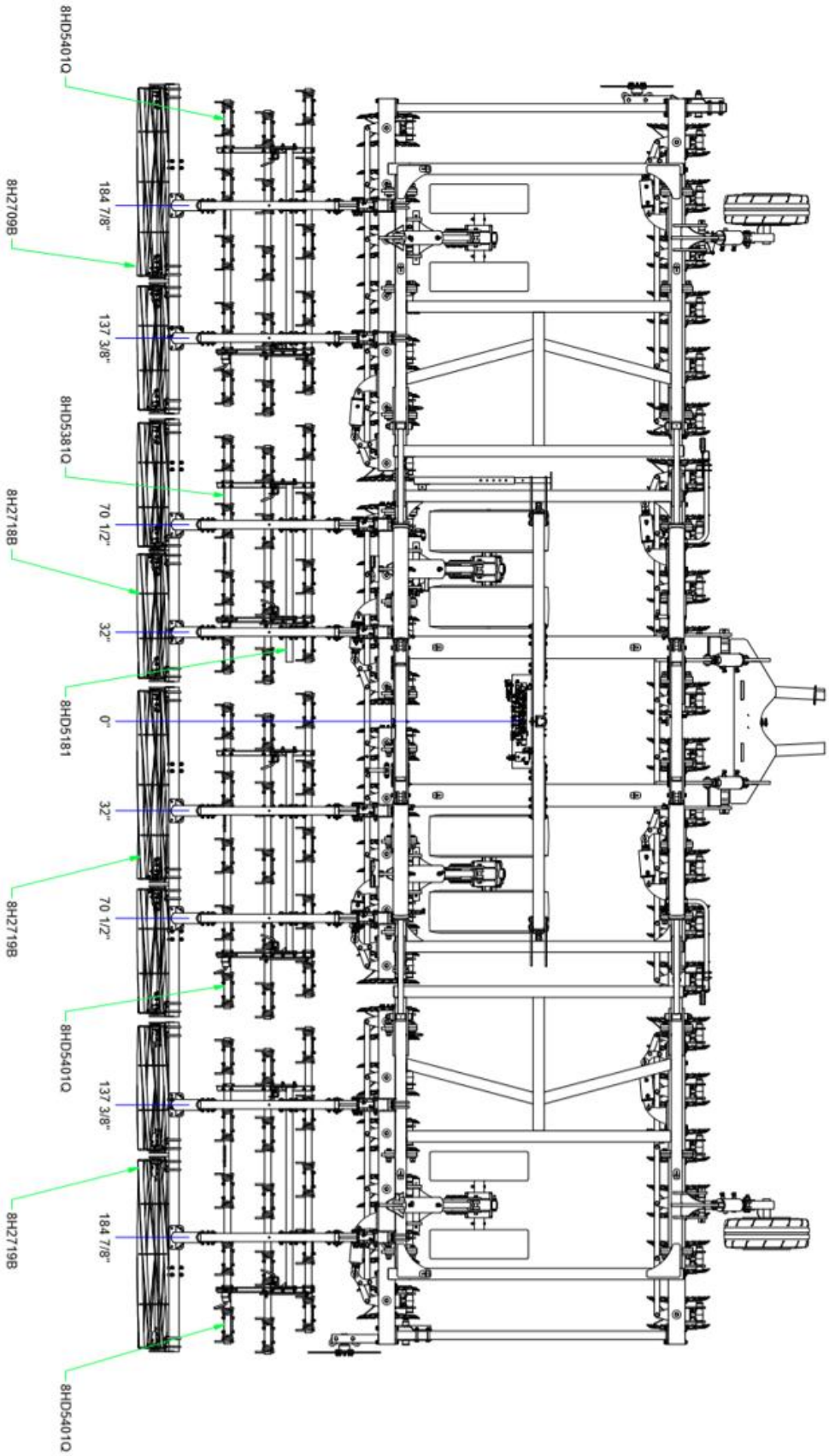

HARROW/BASKET LAYOUT (40')

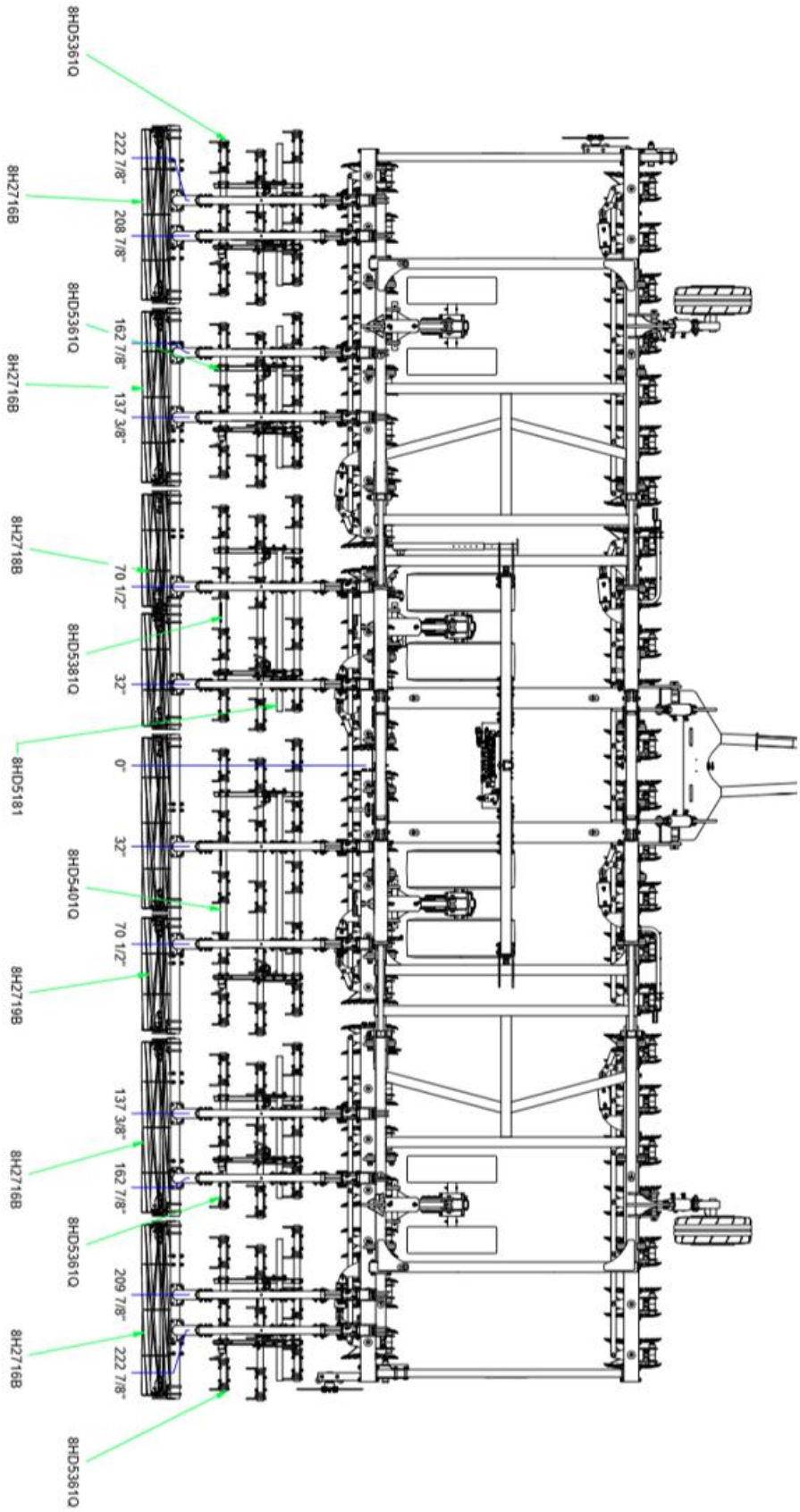

CONNECTING TO THE TRACTOR

The Summers VRT Renegade™ is equipped with and Articulating Ball hitch. This hitch is designed to eliminate “slop” between the implement hitch and the tractor drawbar. 25’ and 30’ machines are supplied with a Category 4 hitch and must be used with a 2” diameter hitch pin. 35’ and 40’ machines are supplied with a Category 5 hitch and must be used with a 2-3/4” diameter hitch pin. A reducing bushing is also supplied to adapt to a Category 4 drawbar.

The VRT Renegade™ has 3 hydraulic circuits, Lift/Depth Control, Wing Fold/Down pressure, and Auxiliary. After connecting the hoses to the tractor, the flow controls should be set as follow:

Green: Main Lift/Depth Control. Extend – 100% flow, Retract – 30%-50% flow.

Red: Auxiliary. **MUST BE IN CONSTANT FLOW,** 40% flow.

Gold: Wing Fold/Down pressure. **MUST BE IN CONSTANT FLOW,** 40% flow. Alternatively, wing circuit can be run in Float.

*The above flow settings are only a suggested baseline. Deviation from these settings may be necessary to achieve desired results.

ELECTRICAL HOOKUP

The Summers Safety Light Kit is equipped with a 7 pin connector which meets SAE J560 specification. To protect 7 pin connector, store in dust cap when not attached to towing vehicle.

Connect the IBBC connector (ISO Plug) to the tractor. The VRT Renegade™ does not interface with the tractor’s CAN network, but utilizes the connector for power and ground.

BEFORE INITIAL OPERATION

Remove the shipping locks from the center section Rolling Baskets, shown below.

Failure to remove shipping locks may result in damage to the machine.

REMOVE SAFETY LOCKS

Remove wing and lift cylinder locks.

Wing Locks

Lift Cylinder Locks

Open Hydraulic Hitch Ball Valve and remove the cylinder stops from the hitch cylinders.

Cylinder Stops

Remove rear jack and place into storage location.

Rear Jack Down

Rear Jack Stored

TABLET SETUP

Note: The minimum system requirements is Apple iOS version 12.

The Soil Control App must be downloaded from Apple App Store. Once in the App Store, search for “Summers Soil Control”.

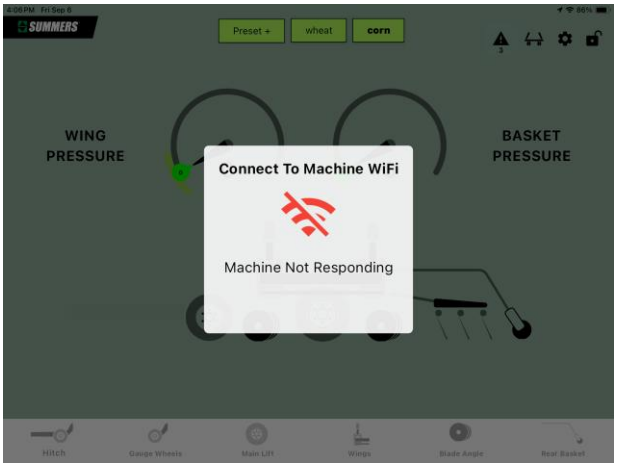

Choose “get” once you find the App. NOTE: You will need to log in with a valid Apple ID in order to “get” the App.

Note: The Soil Control App will show “Disconnected” unless it is connected to the VRT Renegade’s WIFI network.

With power supplied to the machine (tractor key in “On” or “Accessory” position) connect the tablet to the VRT Renegade’s WIFI network. The network name will be MACH-XXXXXXXXXXX. A password may be required at initial startup. The password is **summersmfg** No spaces and is lowercase. This password is only required at initial connection with each tablet. Once connected to the VRT Renegade’s network, it will show up under the WIFI section.

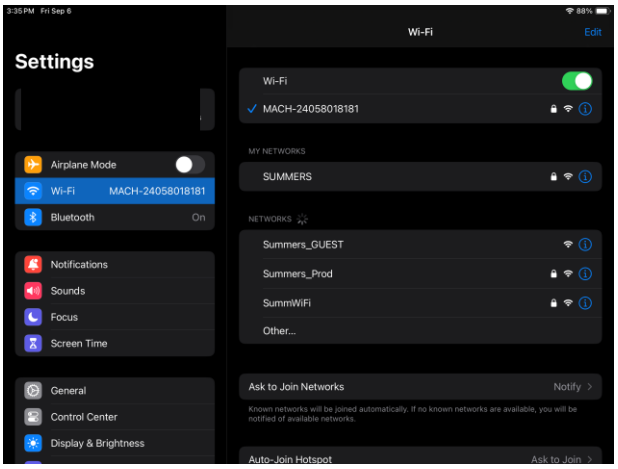

STARTING THE Soil Control APP

To start the app, tap the icon shown.

The app should open to one of two screens. If the machine is in Transport Mode, the screen should appear as shown below.

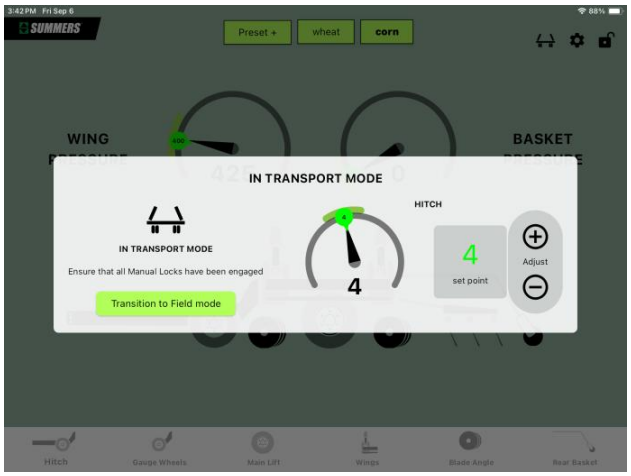

If in Field Mode, the screen should appear as shown here.

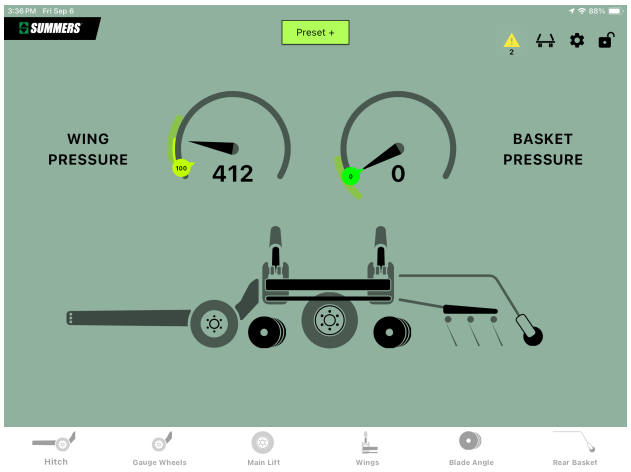

To unfold the wings, tap the “Transition to Field Mode” button, and follow the on-screen instructions.

Note: If the machine is folded up, but the Field Mode home screen is displayed, it may be necessary to temporarily increase the Wing down pressure in order to unfold the wings. See the “WING PRESSURE” section for more information.

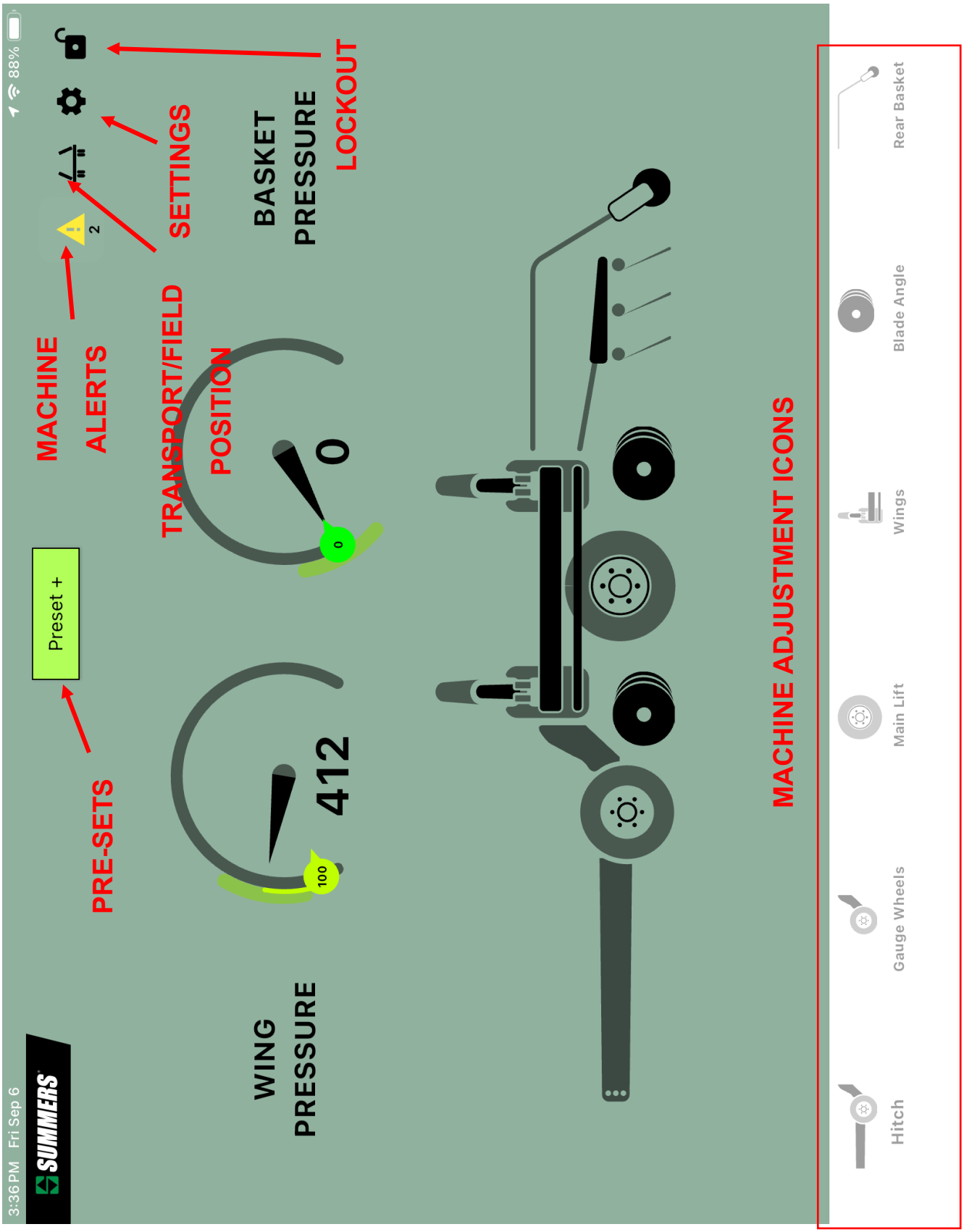
3:36 PM Fri Sep 6
88%
SUMMERS
Preset +
PRE-SETS
MACHINE
ALERTS
2
SETTINGS
LOCKOUT
TRANSPORT/FIELD
POSITION
0
0
BASKET
PRESSURE
WING
PRESSURE
412
100
MACHINE ADJUSTMENT ICONS
Hitch
Gauge Wheels
Main Lift
Wings
Blade Angle
Rear Basket

REPHASING SEQUENCE

It is recommended to run a Rephasing Sequence at the start of, and occasionally throughout the day. To conduct a machine rephase, tap the Settings button on the Home Screen. From the Settings page, tap "Rephase" and follow the on-screen instructions.

CALIBRATING THE VRT RENEGADE

Any time a position sensor is replaced, a Calibration will need to be performed. To begin the Calibration process, go to the Settings page, and tap "Calibrate". Follow the on-screen instructions. See page 3.10 – 3.15 for detailed Calibration sequence.

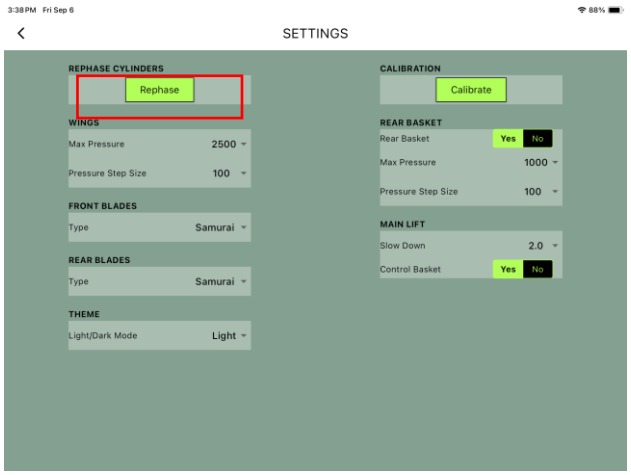

Note: It is recommended to complete a Rephasing Sequence prior to Calibrating.

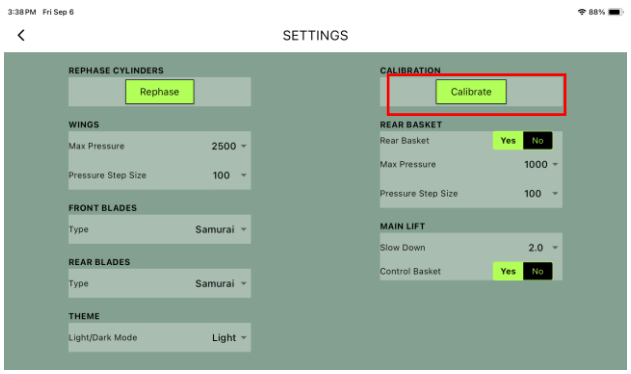

SELECTING BLADE TYPE

The VRT Renegade is designed to be able to operate with different blade types. If the machine is outfitted with Coulter Blades, selecting this option will limit the blade angle to 0° to 6°. This is done to protect the blades from damage due to excessive side draft. Likewise, if the machine is outfitted with Disk Blades, selecting this option will limit blade angle to 6° to 19°. Running less than 6° on a disk blade can cause the back side of the blade to hold up the machine, as well as cause compaction. If the machine has Samurai™ Blades, it can be operated at any angle from 0° to 19°.

To select the blade type, go to the Settings page, and select the front and rear blade type, shown below.

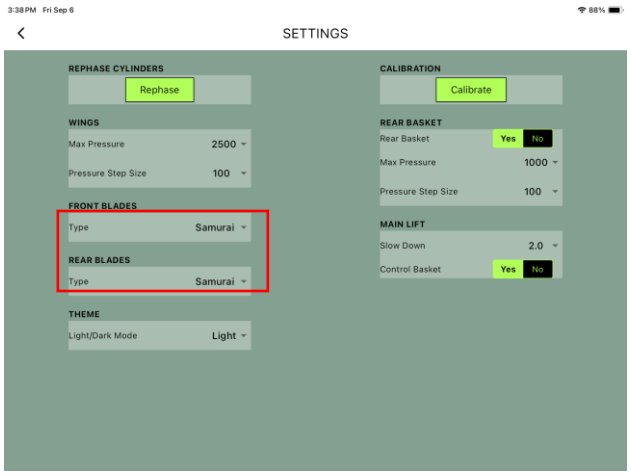

HITCH ADJUSTMENTS

To make adjustments to the Hydraulic Hitch, tap the “Hitch” button at the bottom of the Home Screen.

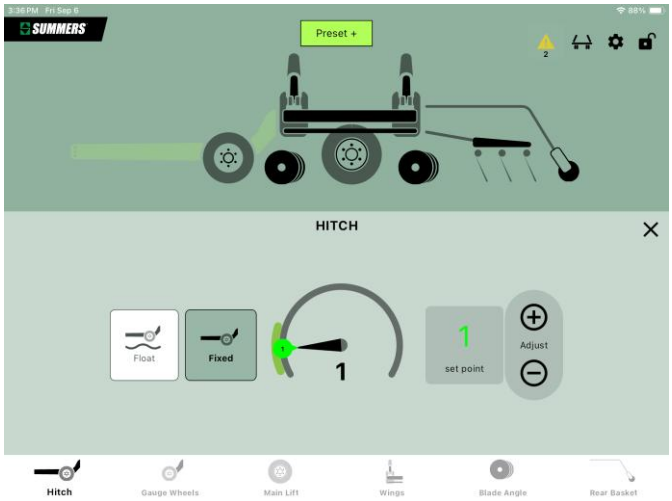

From the Hitch screen, select either “Float” or “Fixed”. The “Float” setting will allow the hitch to float for better contouring ability. The “Fixed” setting allows for weight transfer fore and aft. Increasing the Set Point tilts the machine rearward, decreasing the Set Point tilts the machine forward. Adjustments to the Hitch position can only be made while the machine is in the lowered position.

NOTE: Hitch will lock in middle position when machine is raised and hitch is set to “Float”.

GAUGE WHEEL ADJUSTMENTS

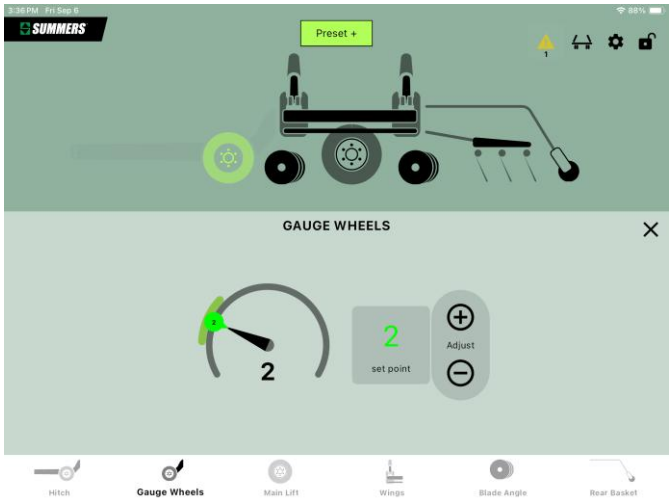

To make adjustments to the Gauge Wheels, tap the “Gauge Wheels” button at the bottom of the Home Screen.

The Gauge Wheels can be used to level out the machine from side-to-side, as well as prevent “gouging” when crossing a ditch. Increasing the Set Point lowers the Gauge Wheels, decreasing the Set Point Raises them.

MAIN LIFT/DEPTH CONTROL

The Main Lift of the machine is controlled by the operator through the tractor hydraulic remote. The Soil Control App is only used to adjust the depth setting. The operator must manually raise and lower the machine.

To change the tillage depth settings, tap the “Main Lift” button at the bottom of the Home Screen.

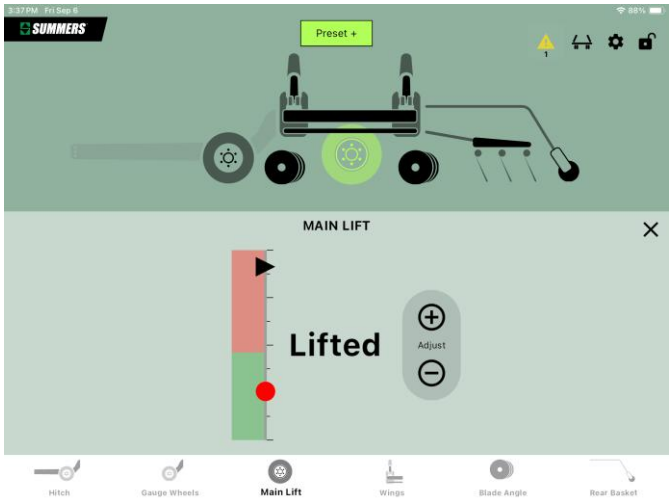

The current position of the wheels will be shown, as well as the Set Point. The current position will show “Lifted” when machine is completely raised. The line between red and green represents the ground surface. The red dot in the green zone is the tillage depth. Pressing the “+” increases the tillage depth, pressing the “-“ decreases the tillage depth.

WING PRESSURE

The folding and unfolding of the wings on the VRT Renegade is controlled by the operator through the tractor hydraulic remote. The Soil Control App is only used to adjust the amount of down pressure applied to the wings.

To adjust the Wing Down pressure, tap the “Wings” button at the bottom of the Home Screen.

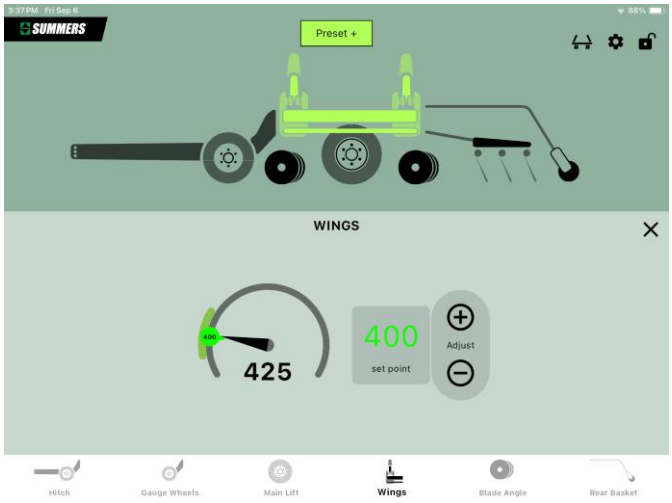

The current hydraulic pressure, as well as the Set Point are displayed. Increasing the Set Point will transfer more weight from the center frame of the machine to the wings.

If no Wing down pressure is desired, the operator may place the tractor hydraulic remote into “Float”.

Important: The wing circuit must be run in either constant flow or float. Failure to do so may result in damage to the machine.

BLADE ANGLE

To make adjustments to the Blade Angle, tap the “Blade Angle” button at the bottom of the Home Screen.

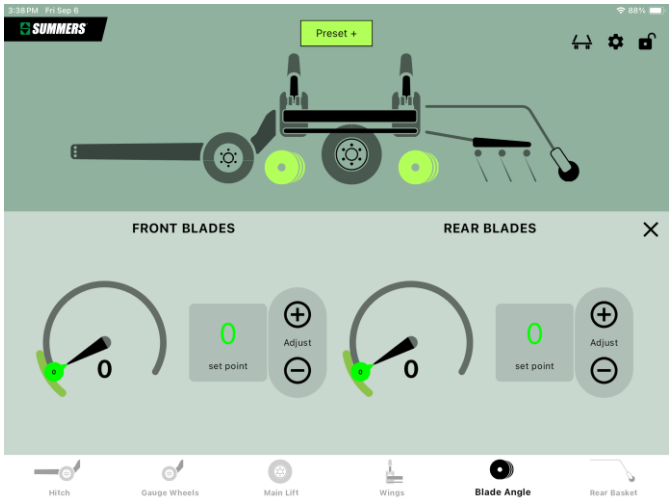

The current angle and the target Set Point are displayed for both the front and rear blades. Front and Rear blades can be adjusted independently. The range of adjustment available to the operator will be dependent on the Blade Type selection made in the Settings page.

ROLLING BASKETS

To make adjustments to the Rolling Baskets, tap the “Rear Baskets” button at the bottom of the Home Screen.

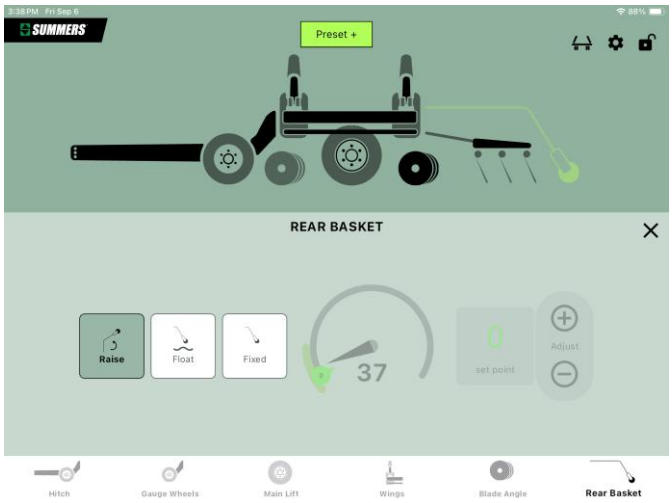

BASKETS CONTINUED

From the Rear Baskets screen, select “Raise”, “Float”, or “Fixed”. The Raise setting will lift the Baskets off the ground in the instance that the operator wishes to utilize only the harrows. The Float setting will allow the Baskets to “float” with no additional down pressure. The Fixed setting applies hydraulic down pressure. Increasing this Set Point increased the pressure on the baskets. When the Fixed setting is selected, the current hydraulic down pressure will be displayed, as well as the target pressure.

PRESETS

The Soil Control App allows the operator to create presets for machine. These presets provide the ability to quickly change machine settings for different conditions. Presets are displayed at the top of the Home Screen.

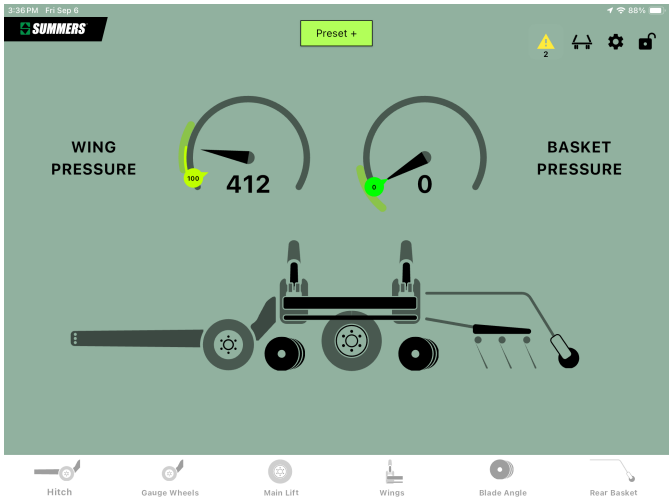

Once the machine has been configured to achieve satisfactory results, a preset can be created by tapping the “Preset +” button at the top of the Home Screen. A custom name can then be input for the preset. The current machine configuration will then be saved.

By pressing and holding on an existing Preset, the operator can rename or overwrite the preset.

Note: If the operator wishes to “update” a current Preset after making minor adjustments, pressing and holding the Preset, and tapping “overwrite” will allow keeping the same name.

To activate a Preset, tap the desired Preset button at the top of the Home Screen.

The operator can then view all settings in the Preset, and then either tap “Back”, or “Load”. “Back” returns to the Home Screen, and “Load” will activate the Preset.

To change or delete an existing preset, press and hold the preset the user wants to change. A box appears with Back to return to home page, Overwrite to apply changes to selected preset, Rename will allow user to rename the selected preset, Delete will delete the selected preset.

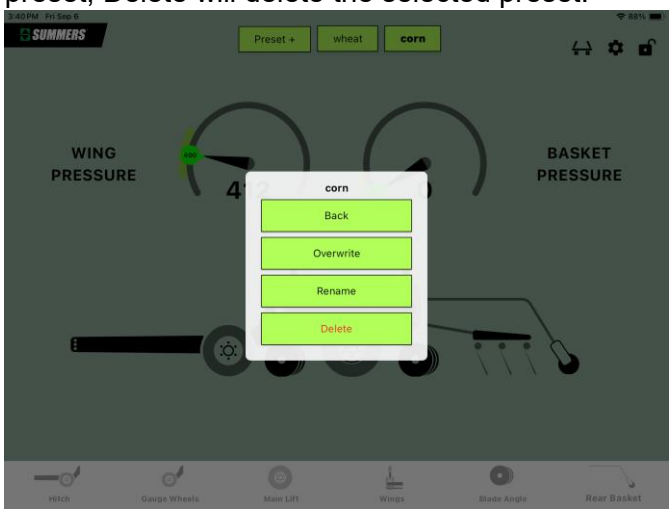

LOCKOUT MODE

To prevent accidental changes to machine settings, as well as unexpected moving parts if someone is near the machine, the operator should use the “Lockout” feature any time the machine is “active” but sitting in one place; ex. Troubleshooting, non-operator passenger in cab, etc.

To activate Lockout Mode, tap the Lockout button at the top right of the screen.

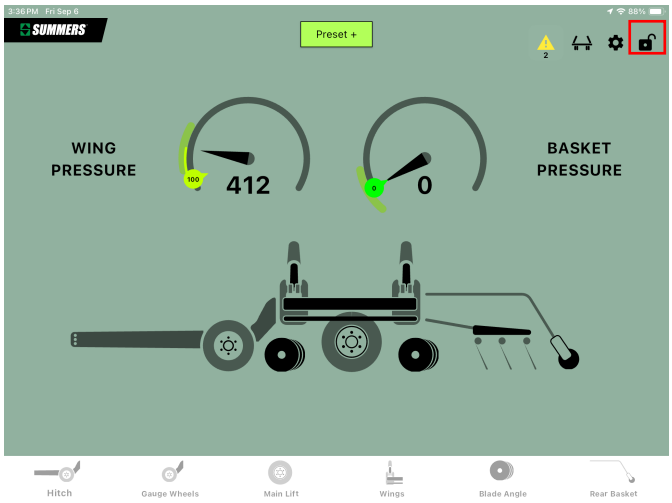

This will lock the app, and not allow inputs until unlocked.

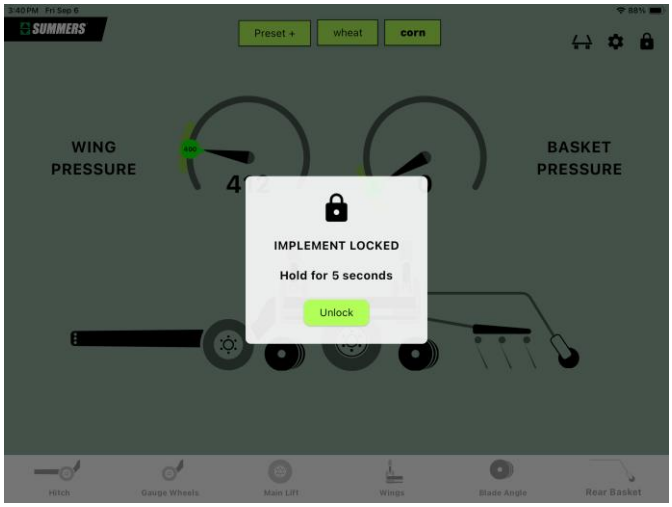

Machine Alerts

Machine alerts are in the upper right corner. When selected, any issues will be displayed for user to address.

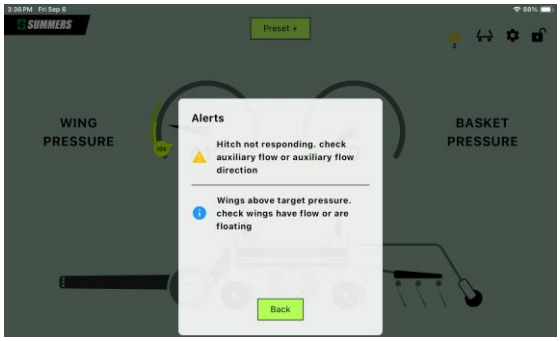

TRANSPORT MODE

To transition to the Transport Mode, tap the “Transport” button at the top of the Home Screen and follow the on-screen instructions.

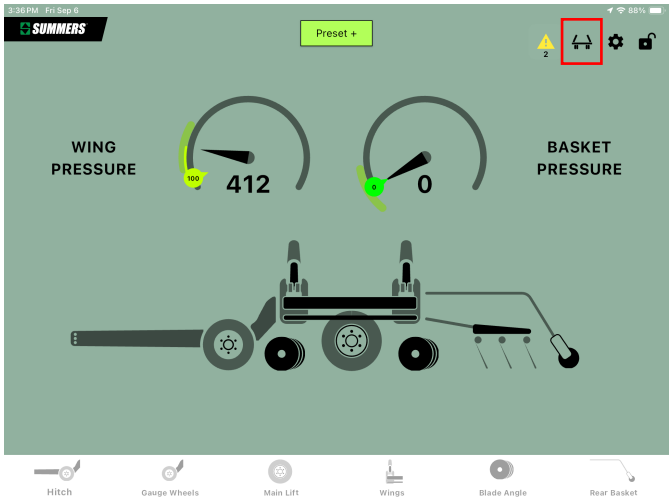

At this point, the operator will be able to make adjustments to the Hydraulic Hitch to allow for proper balance and ground clearance.

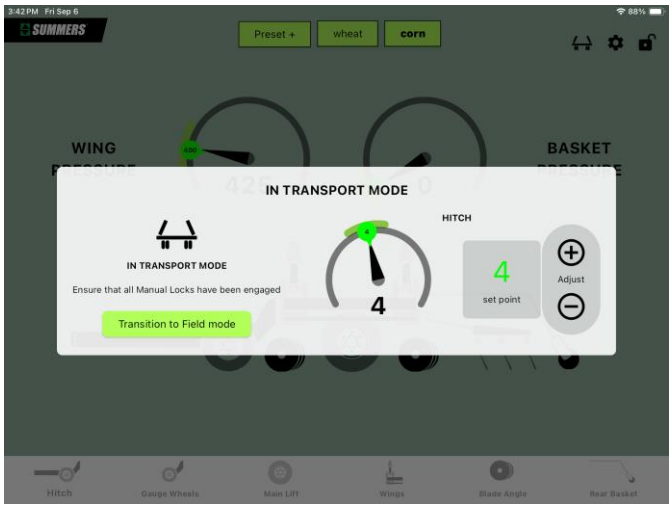

CALIBRATION SEQUENCE

Upon entering Calibration, the user must perform certain actions, in a certain sequence, as instructed by the Soil Control App. This section will describe, in detail, the actions to be performed, as well as the automated movements the machine will make during the Calibration process. If not performed properly, the machine will not operate, and the Calibration process must be started over.

****USER INPUT**** Fully retract depth control cylinders

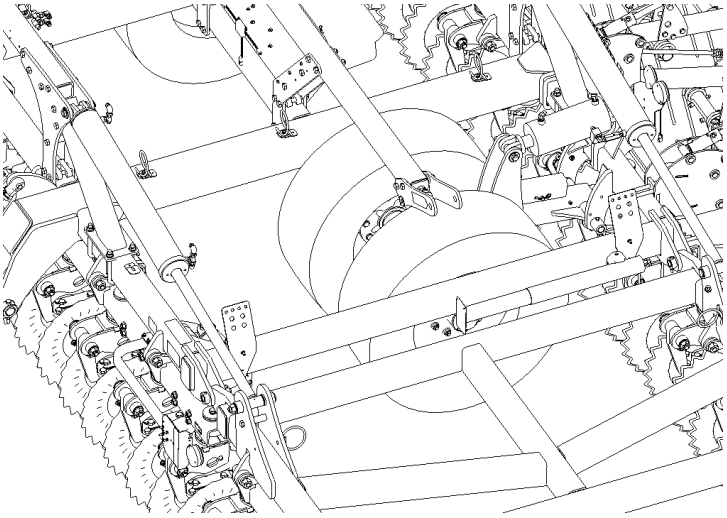

****USER INPUT**** Float depth control cylinders until transport wheels touch the ground

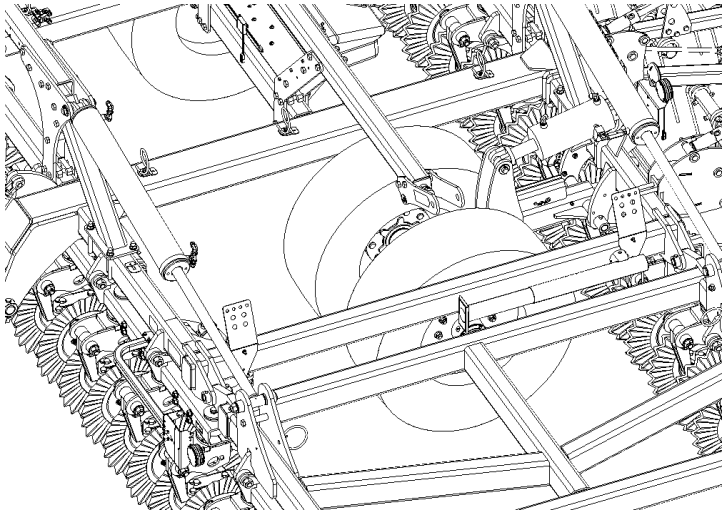

CALIBRATION SEQUENCE

****USER INPUT**** Fully extend depth control cylinders

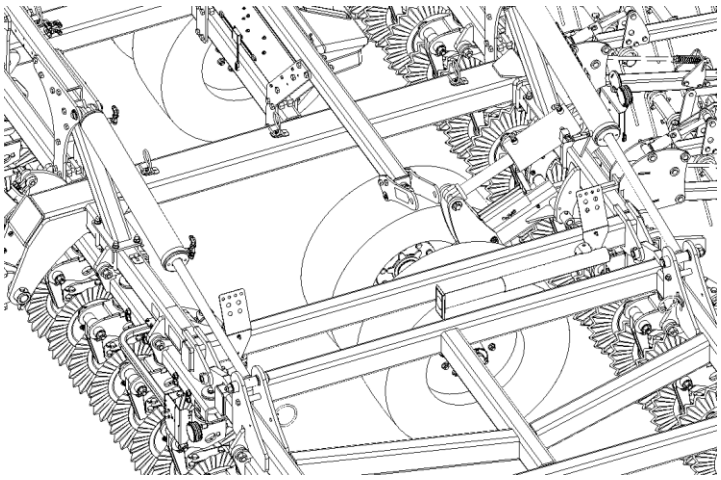

The remainder of the calibration sequence is controlled by the Soil Control system. Before beginning, ensure the AUXILIARY SCV is detented in the extend position. There is a check valve in the hydraulic circuit, allowing flow in only one direction. If the machine actions described below do not occur, it is likely the result of no hydraulic flow. Ensure hydraulic hoses are properly connected, and SCV is in constant flow.

****USER INPUT**** Detent Auxiliary circuit in the extend direction

CALIBRATION SEQUENCE

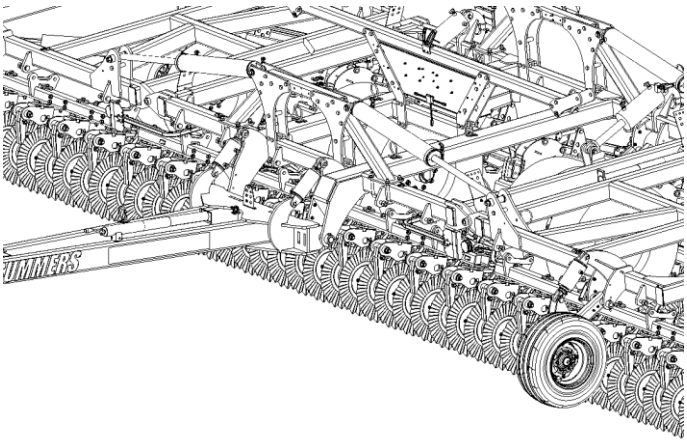

Hitch cylinders will fully retract, pitching machine forward.

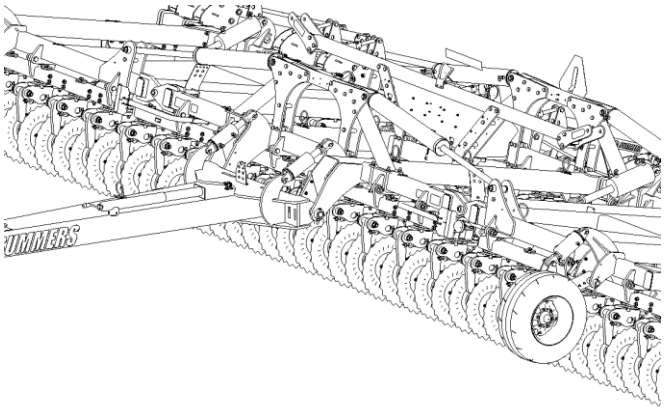

Hitch cylinders will fully extend, pitching machine rearward.

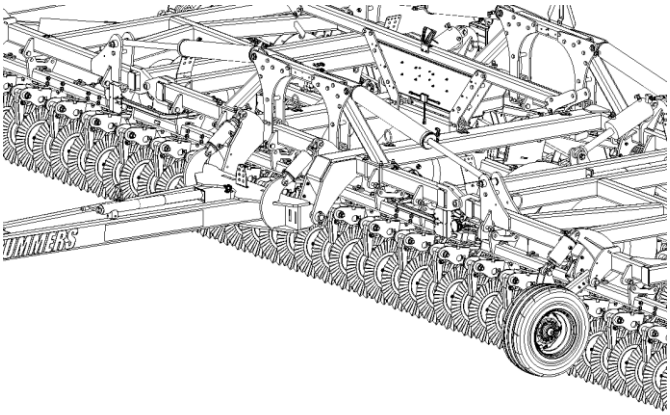

Hitch cylinders will go to a mid-stroke position, leveling machine.

CALIBRATION SEQUENCE

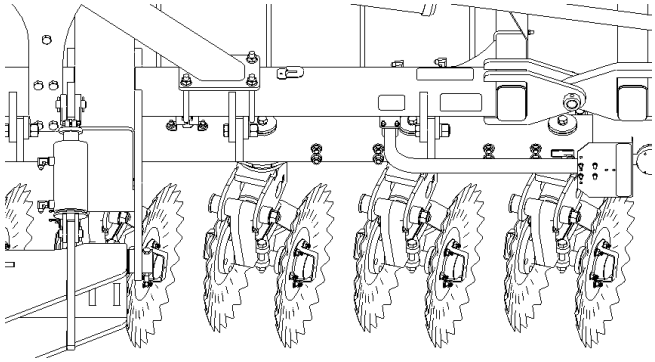

Front blade cylinders will fully extend, moving blades to maximum angle.

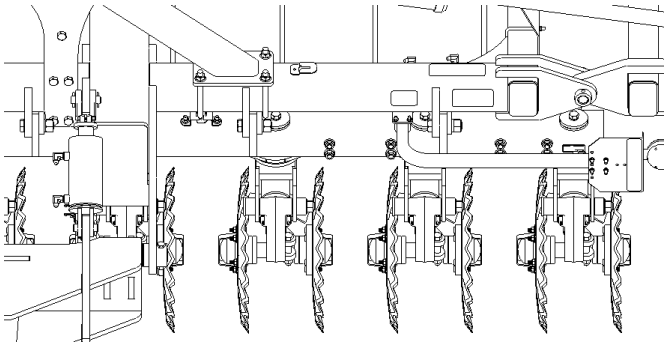

Front blade cylinders will fully retract, moving blades to straight.

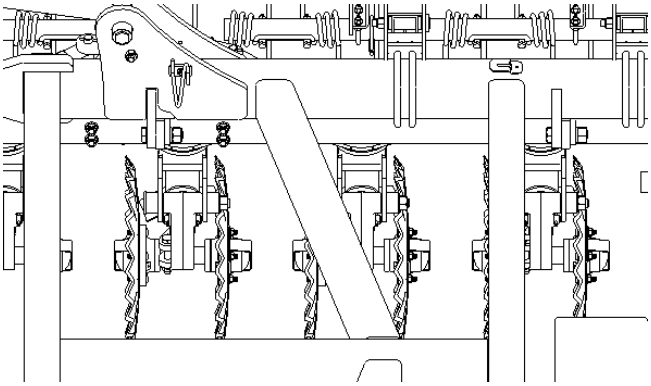

Rear blade cylinders will fully retract, moving blades to straight.

CALIBRATION SEQUENCE

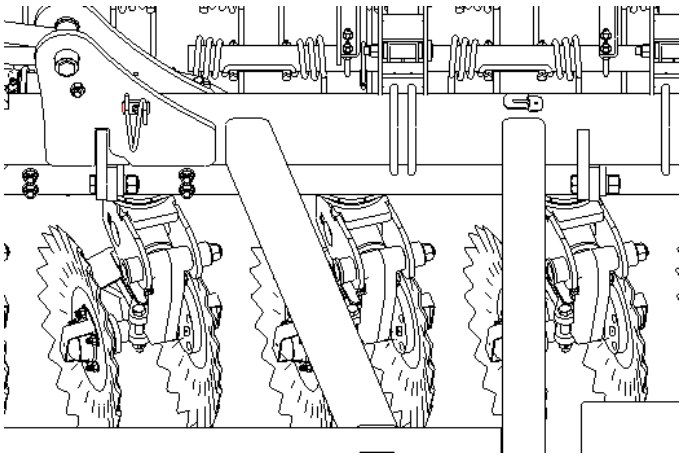

Rear blade cylinders will fully extend, moving blades to maximum angle.

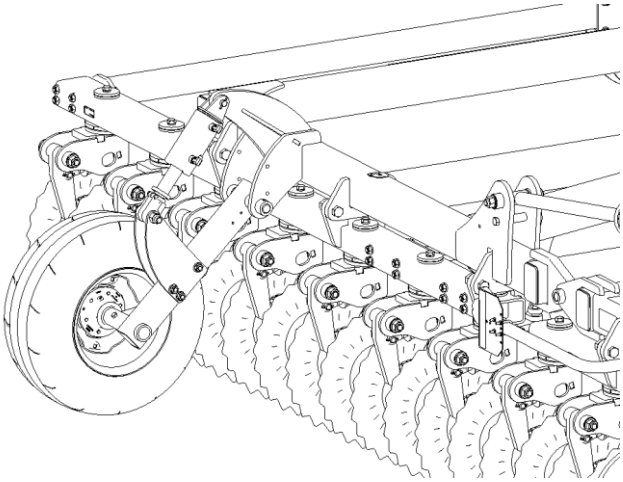

Gauge wheel cylinders will fully extend, lowering wheels.

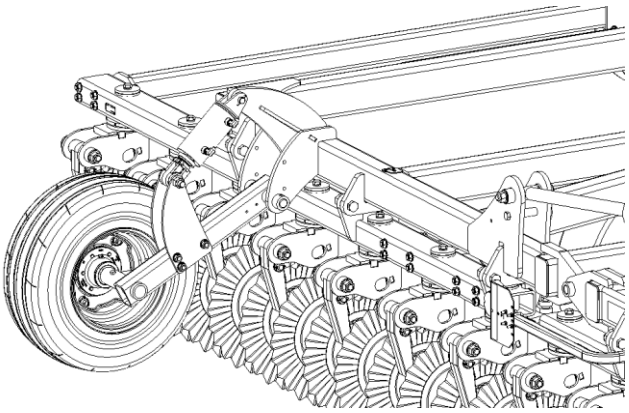

Gauge wheel cylinders will fully retract, raising wheels.

SWITCH BOX OPERATION

POWER SWITCH

Power Toggle Switch must be turned on for the Screen Display and Switchbox to operate.

HYDRAULIC HITCH

The Hydraulic Hitch setting allows for weight to transfer fore and aft. Increasing the Set Point tilts the machine rearward, decreasing the Set Point tilts the machine forward. Adjustments to the Hitch position can only be made while the machine is in the lowered position.

HYDRAULIC HITCH FLOAT

The “Float” setting will allow the hitch to float for better contouring ability. If the hitch is in “Float” the LED light will be on. This feature will only work if the machine is lowered.

Note: Float is the recommended setting when working in rocky or uneven conditions.

GAUGE WHEELS

The Gauge Wheels can be used to level out the machine from side-to-side, as well as prevent “gouging” when crossing a ditch. Increasing the Set Point lowers the Gauge Wheels, decreasing the Set Point Raises them.

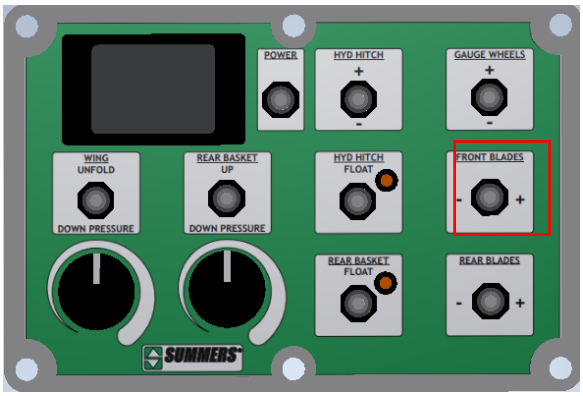

WING UNFOLD/DOWN PRESSURE

When the toggle switch is held in the Unfold position, the down pressure setting is bypassed, allowing the wings to unfold into Field Mode. When the Wing Down pressure Toggle Switch is engaged, the pressure will be displayed on the Renegade Switchbox.

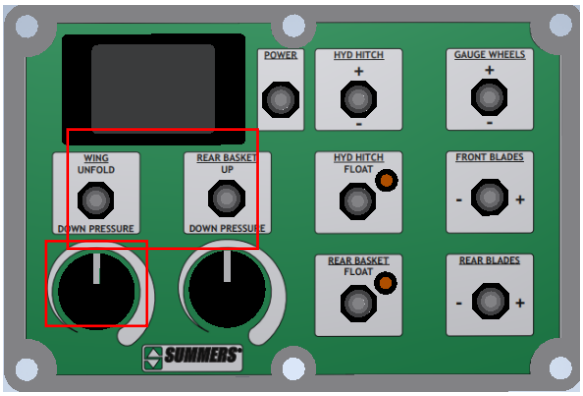

Wing Down pressure is adjusted with the rotary knob below the toggle switch.

REAR BASKET UP/DOWN PRESSURE

After the machine is out of Transport mode and into Field mode use the Rear Basket Toggle Switch to lower and apply down pressure. Use the rotary knob below the toggle switch to increase or decrease down pressure. Pressure is shown in the display.

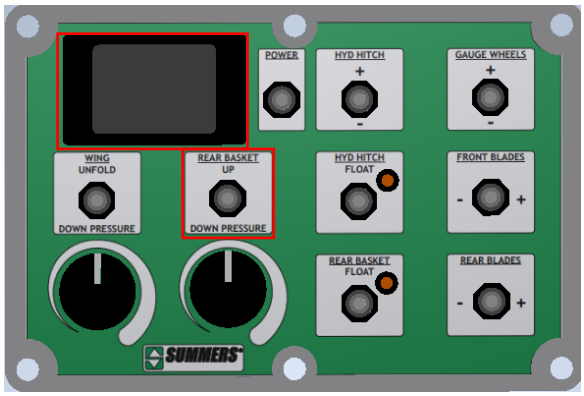

Alternatively, the Rear Baskets can be placed into Float mode by activating the Rear Basket Float switch. If the Rear Baskets are in float, this will be indicated by the LED light next to switch.

To raise the baskets for transport, or when their use in the field is not desired, hold the toggle switch in the UP position until all the Rear Basket sections are fully raised.

BLADE ANGLE ADJUSTMENT

The front and rear blade angles are independently adjustable. To increase blade angle, hold the switch in the + position to increase angle (more aggressive), or the – position to decrease angle (less aggressive).

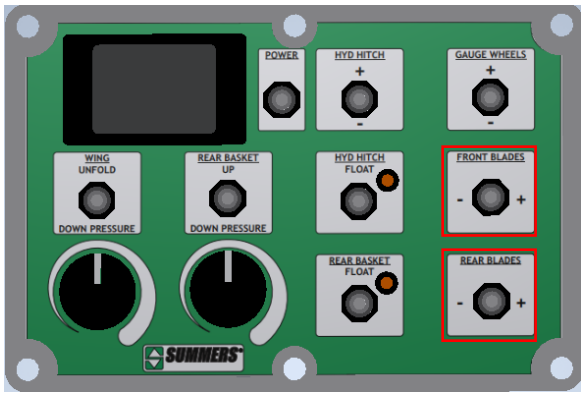

FIELD OPERATION

IMPORTANT

-Ensure Wing and Auxiliary circuit SCVs are in constant flow.

*NOTE: Optionally, Wing circuit SCV can be run in Float

-Never turn on headlands with machine in the ground.

-Operating the machine in hard or frozen soil conditions can have a negative impact on machine performance and may lead to damage to the trip mechanism.

-Run machine with hitch in FLOAT unless running blade angles of 6° or less.

*NOTE: When running hitch in float, the machine will automatically adjust the hitch position to “5” when lifted.

-Make passes at 7°-12° to the rows to prevent tire stubble damage.

SUGGESTED OPERATING MODES

-Set the rear blade angle 2° more aggressive than the front blade angle to ensure the machine tracks straight.

-Begin with Wing Circuit SCV in the Float position. If wings are riding up, detent Wing Circuit SCV in the extend position, and set down pressure to 100. Increase down pressure gradually until the wings and center are running level.

-Lower Gauge Wheels until they are just making contact with the ground.

-Set Rear Baskets to 200.

*The above settings are only a suggested baseline. Deviation from these settings may be necessary to achieve desired results.

TRANSPORTING

Before transporting, close ball valve on center of main frame, and install all transport locks.

Use a safety chain between tractor drawbar and VRT Renegade™ hitch when transporting on public roads.

Check wheel bolts/nuts after first 20 miles of road transport and every 60 miles thereafter.

Road the implement at a reasonable speed, not to exceed 20 MPH.

NOTE: Towing vehicle must weigh a minimum of 1.5x the implement weight. (See table on page 3.21)

Always use an ASABE "Slow Moving Vehicle" emblem and safety lights when transporting on a road or highway. Comply with your state and local laws governing lighting and maximum width regulations. Transport during daylight hours only.

UNHOOKING FROM VRT RENEGADE

Choose a very firm level surface to park.

Either lower wings and blades to the ground OR install Wing and Lift Cylinder transport locks.

Check that hitch pin is not bound with sideways or front to back pressure. If hitch pin is not free, carefully reposition tractor.

Block tires to prevent movement after hitch pin is removed.

Lower front AND rear jacks.

Disconnect wire harnesses, hydraulic hoses, and safety chain.

Recheck that hitch pin is free, if so, stand to the side of the hitch and remove hitch pin.

Carefully drive ahead.

STORAGE

Clean dirt and debris from all electronics and sensors.

Inspect machine for damaged or worn parts, cracked or broken blades, and loose bolts.

Wheel bearings should be inspected seasonally.

It is recommended to store machine unfolded, with both the blades and tires on the ground. If this is not feasible, ensure:

-Machine is in "Transport Mode"

-Lift Cylinder Locks are in place

-Wing Lock pins are in place

-Hitch Cylinder Stops are in place

-Hitch Ball Valve is closed

-Rolling Basket Shipping Locks are installed

-Front AND rear jacks are lowered

-Wheels are chocked

MAINTENANCE

Every 40 hours: Grease articulating ball hitch.

Seasonally: Grease Fold Cylinder Pivot.

Inspect and re-pack Wheel Bearings.

Check Wheel Bolt/Nut torque.

Hub	PN	Wheel Bolt/Nut Torque
614 - 6 BOLT	8K1100	170 ft-lb
812 - 8 BOLT	8K1105	240 ft-lb
817 - 8 BOLT	8K1106	240 ft-lb
1010 - 10 BOLT	8K1109	275 ft-lb

Tire Inflation: Recommended inflation pressures in chart below.

Size	Load Index	Pressure
VF385/65R22.5	163	70 psi
VF285/70R19.5	150	75 psi
IF280/70R15	134	64 psi

PROPER BOLT USE

DO NOT use these values if a different torque value or tightening procedure is given for a specific application. Torque values listed are for general use only. Check tightness of fasteners periodically.

BOLT SIZE	WRENCH SIZE	GRADE 5		GRADE 8	
		ft-lbs	N-m	ft-lbs	N-m
1/4"	7/16" or 3/8"	7	9.5	12	17
5/16"	1/2"	15	20	25	34
3/8"	9/16"	30	41	45	61
7/16"	5/8" or 11/16"	45	61	70	95
1/2"	3/4"	70	95	105	142
9/16" Wheel Bolts	7/8"	170	231		
5/8"	15/16"	170	231	210	285
5/8" Wheel Nuts	1-1/16"	240	325		
3/4"	1-1/16"* or 1-1/8"	250	339	375	509
3/4" Wheel Nuts	1-1/8"	275	373		
7/8"	1-5/16"	350	475	600	814
1"	1-1/2"	450	610	880	1193
1-1/4"	1-7/8"	500	678		
1-1/2"	2-1/4"	570	773		
2"	3-1/8"	1200	1627		
METRIC					
M5	3 mm socket or 8 mm	22 in-lb	2.5 N-m		
M6	4 mm socket	70 in-lb	8 N-m		
*Nylon Lock Nut					

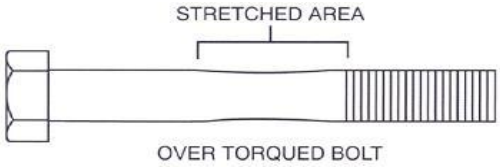

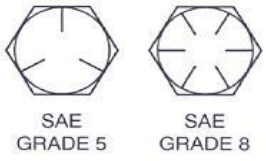

TROUBLESHOOTING

For issues not addressed/remedied by this guide, please contact Summers Service Dept.

NO.	PROBLEM	PROBABLE CAUSE	CORRECTION
1	Tablet will not connect to Wi-Fi	A. ISOBUS connection not seated properly	Check connection
		B. No power to ISOBUS	Check fuse or power source (tractor side)
			May need to disconnect power and restart procedure
2	Cannot find the App Icon to run the machine	A. App was not installed	See section for downloading the Summers Soil Control VRT Renegade app.
3	Tablet settings are not consistent between “current” and “set point”	A. Aux hydraulic turned around	(+) Positive colored grip should be on extend
			(-) Negative colored grip should be on retract
		B. Re-calibration required	Calibration is found under the “settings” tab on the top right of the I-pad
		C. Re-phasing required	Re-phase is found under the “settings” tab on the top right of the I-pad
		D. Sensor damage	Check sensor for movement or damage
4	Wings will not unfold	A. Hydraulic flow set too low	Increase hydraulic flow on the tractor
		B. Max pressure setting low	Increase “max pressure” under the “settings” tab on the I-pad
		C. Renegade is not in transport mode	Will need to complete the transport mode. The I-pad will then show “entering field position”
		D. Safety pins in place	Remove pins
5	Functions will not respond with the Tablet	A. Auxiliary hydraulic is not engaged	Engage auxiliary remote to continuous flow
		B. Auxiliary hydraulics are not hooked up correctly	Check to see if hydraulic lines are hooked up correctly
6	Wings are not penetrating	A. Not enough wing pressure	Increase wing pressure
		B. Gauge wheels holding up the wings	Retract gauge wheels
		C. Basket pressure to high	Reduce basket pressure

7	VRT Renegade is not running straight or is “dog tracking”	A. Blade angle	To move the machine to the right, increase front angle or decrease rear. To move machine to the left, decrease front angle or increase rear.
		B. Hitch Pitch	Float the hitch or pitch forward to move right or pitch back to move left.
8	Wings are going in too deep.	A. Wing pressure to high	Reduce wing pressure
		B. Gauge wheels not contacting the ground	Increase gauge wheel set point
			Increase basket pressure
9	VRT Renegade is not running level front to back	A. Hitch not in correct position	Adjust hitch angle
			Run hitch in float
10	Depth of the machine is not consistent to the I-pad settings of the machine	A. Communication error	Shut down tractor to break connection and restart
		B. Sensor	Check for sensor damage
		C. Calibration needed	Calibrate the machine found under “settings”
11	Blades will not position to desired angle	A. Blade type setting is incorrect	Go to “settings” and change the front and/or rear blade type setting to desired type. Concave setting is from 6-19 degrees and coulter is 0-6 degrees.
12	Blade angle will not change	A. Auxiliary circuit not engaged	Engage Auxiliary circuit
		B. Sensor	Check position sensor for damage
13	Transport mode will not run complete and is stuck on “activate cylinder extend on main lift to raise machine”	A. App not responding	Close the app and restart it – go through re-phase and recalibration mode
			Disconnect the power (tractor) and restart
15	I-pad isn’t responding or is locked up	A. Communication error	Turn the tractor off
			Unplug the ISOBUS connection
			Close app
			Double click on I-PAD home button and “swipe” off each app
			Re-open app
17	Main lift shows at outer limits only and will not adjust. In addition, the transport option will not go past extend main lift all the way.	A. Calibration process was done in reverse	Refer to calibration section
18	Blade angle shows extremely high or negative number and not responding	A. Sensor may be bad.	Replace sensor
		B. App caught between readings due to recent recalibration	Use + and – buttons to move the setting to the displayed current value, or 0, then proceed as normal

SPECIFICATIONS

SIZE	BLADE QTY	TRANSPORT WIDTH	TRANSPORT HEIGHT	MACHINE WEIGHT	OVERALL LENGTH
25'	64	15'-6"	13'-9"	25,700	29'-10"
30'	72	15'-6"	15'-4"	27,000	29'-10"
35'	88	20'-7"	16'3"	29,380	32'-3"
40'	96	20'-7"	17'10"	32,100	32'-3"

*Dimensions and Weights are approximate

SENSOR REPLACEMENT

BLADE ANGLE SENSOR

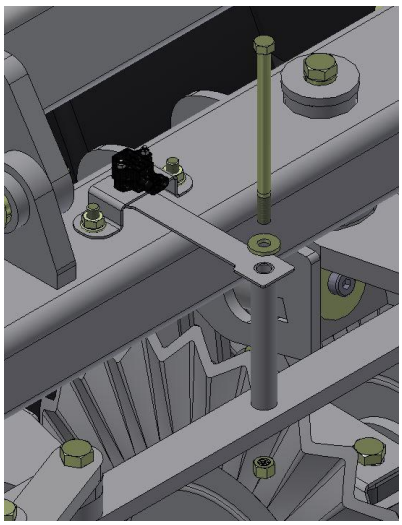

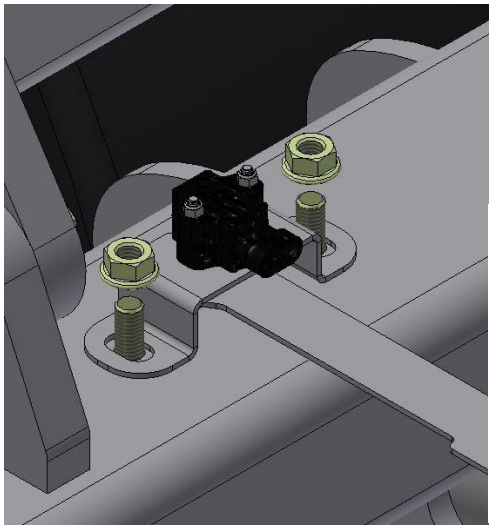

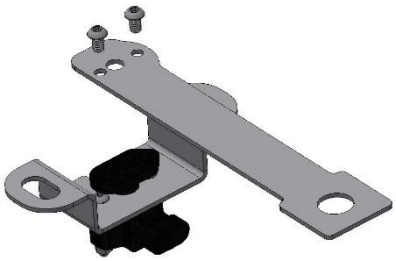

MAIN LIFT, GAUGE WHEEL, HITCH SENSOR

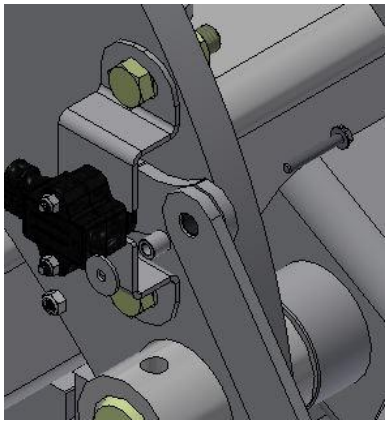

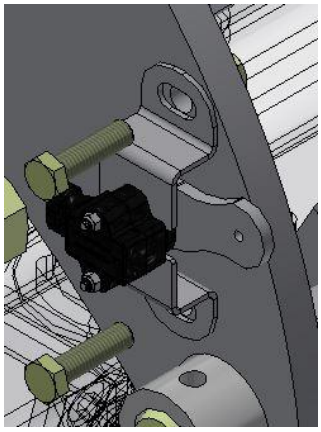

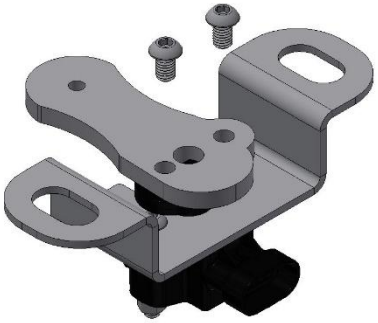

NOTE ORIENTATION OF SENSOR CONNECTOR AND LEVER DIRECTION

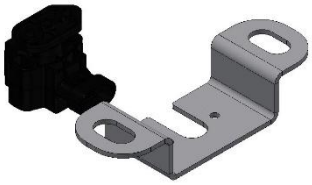

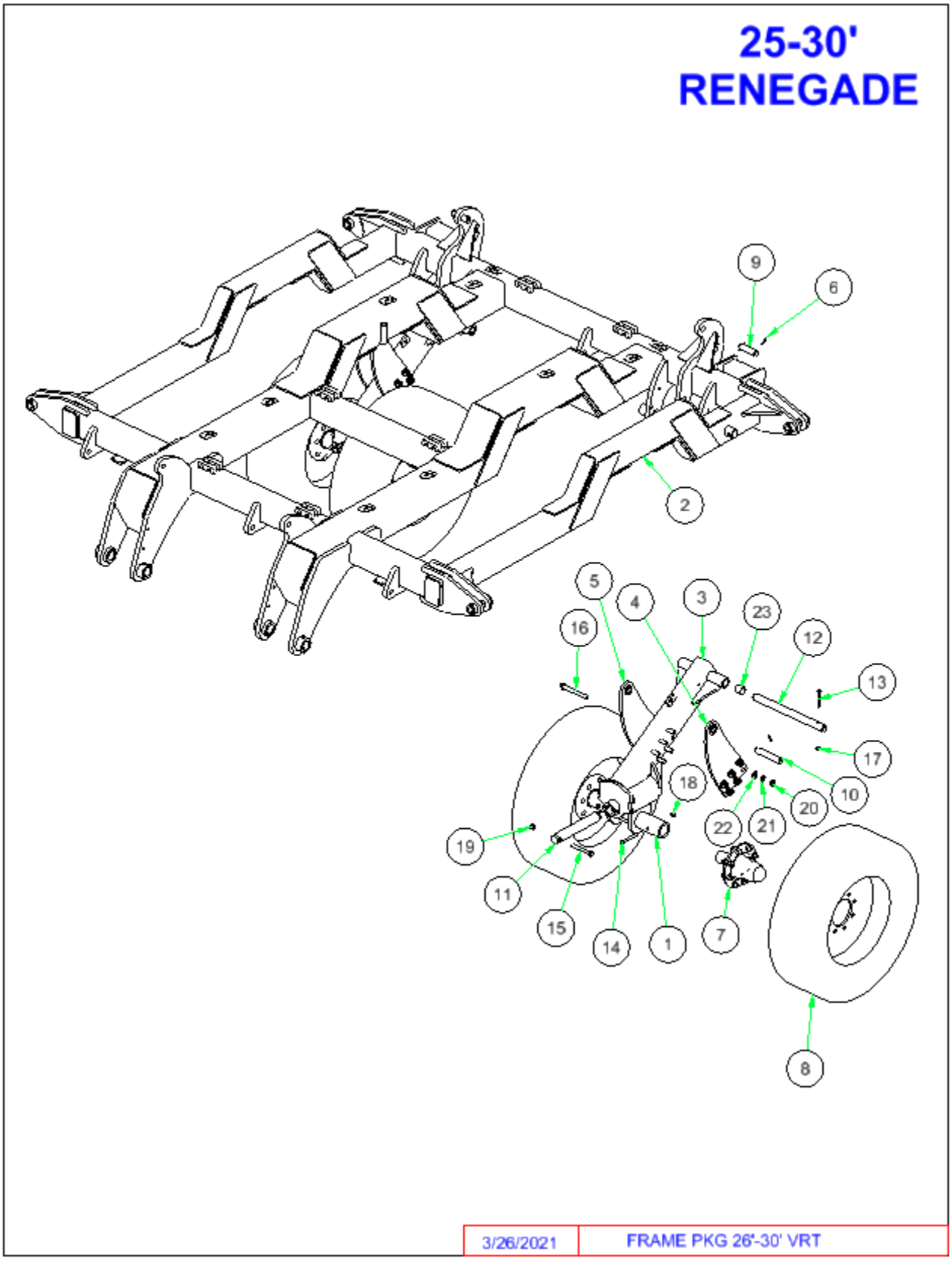
25-30'
RENEGADE
9
6
2
5
4
3
23
16
12
13
17
18
10
20
22
21
19
11
15
14
1
7
8
3/26/2021
FRAME PKG 26'-30' VRT

ITEM	PN	DESCRIPTION
1	8B1270B	OSC AXLE SPNDLE HLDR 2.5"
1	8B1270C	OSC AXLE SPNDLE HLDR 2.5” AFTER SERIAL NUMBER 240000
2	8B2515P	FRAME WING RNGD 25'-30' R-PTD
3	8B2540	LIFTARM OSC AXL-RNGD
3	8B2540B	LIFT ARM OSC AXL RNGD AFTER SERIAL NUMBER 240000
4	8B2542L	CYL ATTCH 285/70R19.5 W/BUSH-L
5	8B2542R	CYL ATTCH 285/70R19.5 W/BUSH-R
6	8D9108	ROLL PIN 1/4 X 2" YLW ZNC
7	8K1105	HUB&AXLE ASSY HD812(2.5"RCVR)
8	8K7410	285/70R 19.5 ON 19.5X8.25X8WHL
9	8K9106	PIN 1-1/4 X 4-3/8" HARDENED
10	8K9110	PIN 1-1/4 X 6-13/16" HRDND
11	8P3910	PIN 2 X 13-1/2" HARDENED
12	8T3640	PIN 1-1/2 X 19" HARDENED 98-
13	8X0044	BOLT 7/16-14NC X 3-1/2"GR5 ZDI
14	8X0074	BOLT 1/2-13NC X 4-1/2" GR5 ZDI
15	8X0095	BOLT 5/8-11NC X 5" GR5 ZDI
16	8X0121A	BOLT 3/4-10NCX6-1/2" -1.38"THD
17	8X0234	NUT 7/16"-14NC NY-LOCK GR2 ZDI
18	8X0242	NUT 1/2"-13NC NY-LOCK GR2 YZ
19	8X0253	NUT 5/8"-11NC NY-LOCK GR2 YZ
20	8X0265	NUT 3/4"-10NC CNTRLOCK GR2 YZ
21	8X0306	LOCKWASHER 3/4" YLW ZNC
22	8X0317	WASHER 3/4" SAE FLAT YZ
23 23	8X3130 8X3132	SLEEVEBRNG 1.656X1.5" ID- 1.5" SLEEVEBRNG 2.00X1.5” ID-2.0” AFTER SERIAL NUMBER 24000

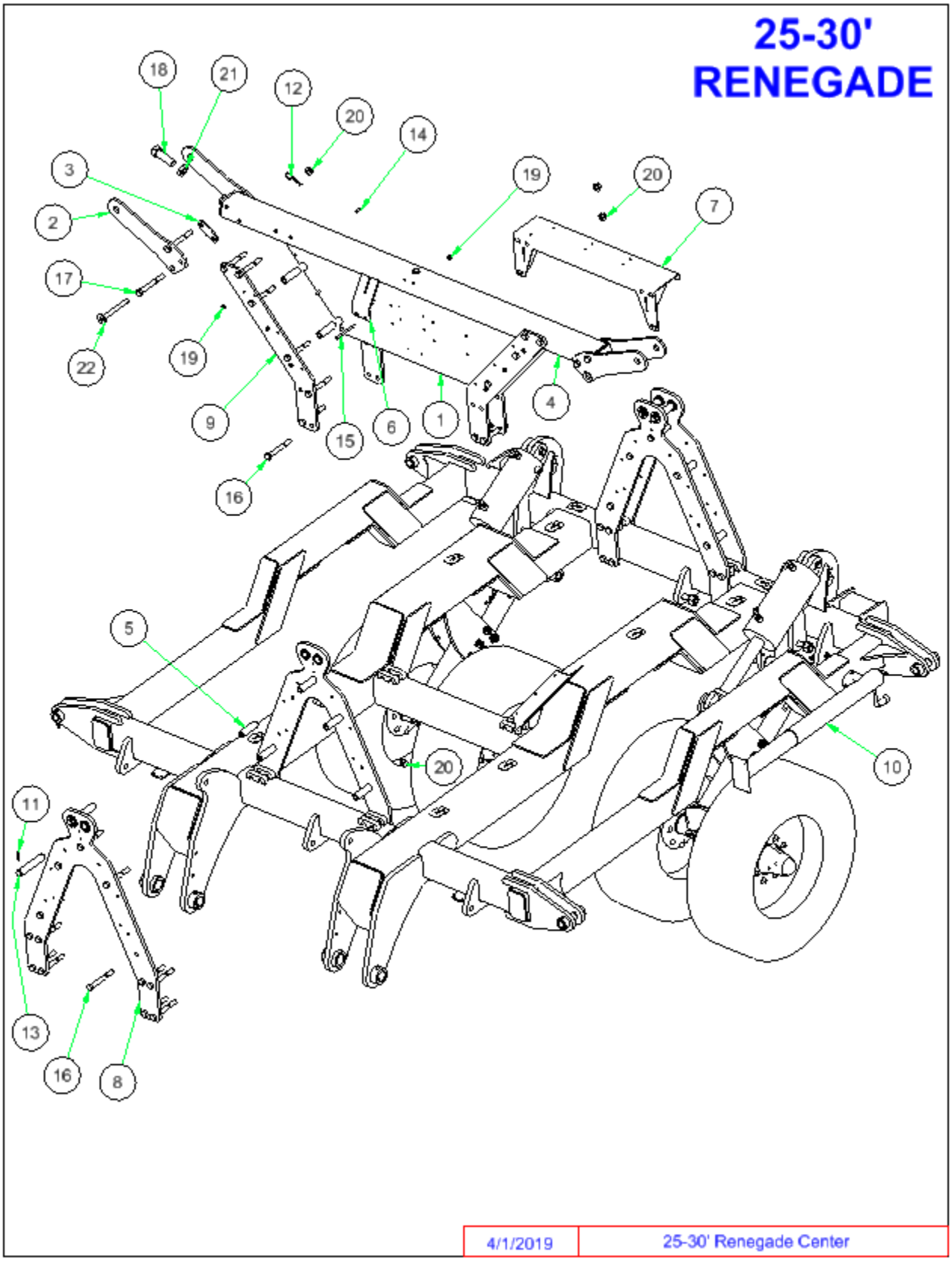
25-30'
RENEGADE
18
21
12
20
14
3
19
20
2
7
17
22
19
9
15
6
1
4
16
5
20
10
11
13
16
8
4/1/2019
25-30' Renegade Center

ITEM	PN	DESCRIPTION	
1	8B0030	CONTROLLER MNT PANEL	
2	8B1215	WING LOCK TAB VRT	
3	8B1217	WING LOCK TAB SPCR	
4	8B2532	WING REST TUBE 25'-30'	
5	8B2536	SPACER .76"ID X 4"	
6	8B2537	ANTENNA MNT	
7	8B2538	HYD VLV BLOCK MOUNT	
8	8B2558	CYL ATTCH WINFOLD 25'-30'	
9	8B2560	TRANSREST MNT PLATE	
10	8D8523	JACK 8000# DROPLEG 5/8X4.25PIN	
11	8D9108	ROLL PIN 1/4 X 2" YLW ZNC	
12	8D9110	HAIR PIN CLIP LARGE(1"CYL PIN)	
13	8K9110	PIN 1-1/4 X 6-13/16" HRDND	
14	8X0002	BOLT 3/8-16NC X 1" GR5 ZDI	
15	8X0017	BOLT 3/8-16NC X 5" GR5 ZDI	
16	8X0116	BOLT 3/4-10NC X 6" GR5 YZ	
17	8X0121	BOLT 3/4-10NC X 6-1/2" GR5 YZ	
18	8X0152	BOLT 1-1/4-7NC X 3.75 FULLTHD	
19	8X0203	NUT 3/8"-16NC SERFLANG GR2 YZ	
20	8X0266	NUT 3/4"-10NC SER FLANG GR2 YZ	
21	8X0283	NUT JAM 1.25"-7NC GR2 ZDI	
22	8X0325	WASHER 3/4"(13/16"ID)FLAT PLN	
23	8B0005	GROMMET 1.75"ODX1.375"ID	* SN AD0013 AND PREVIOUS ONLY

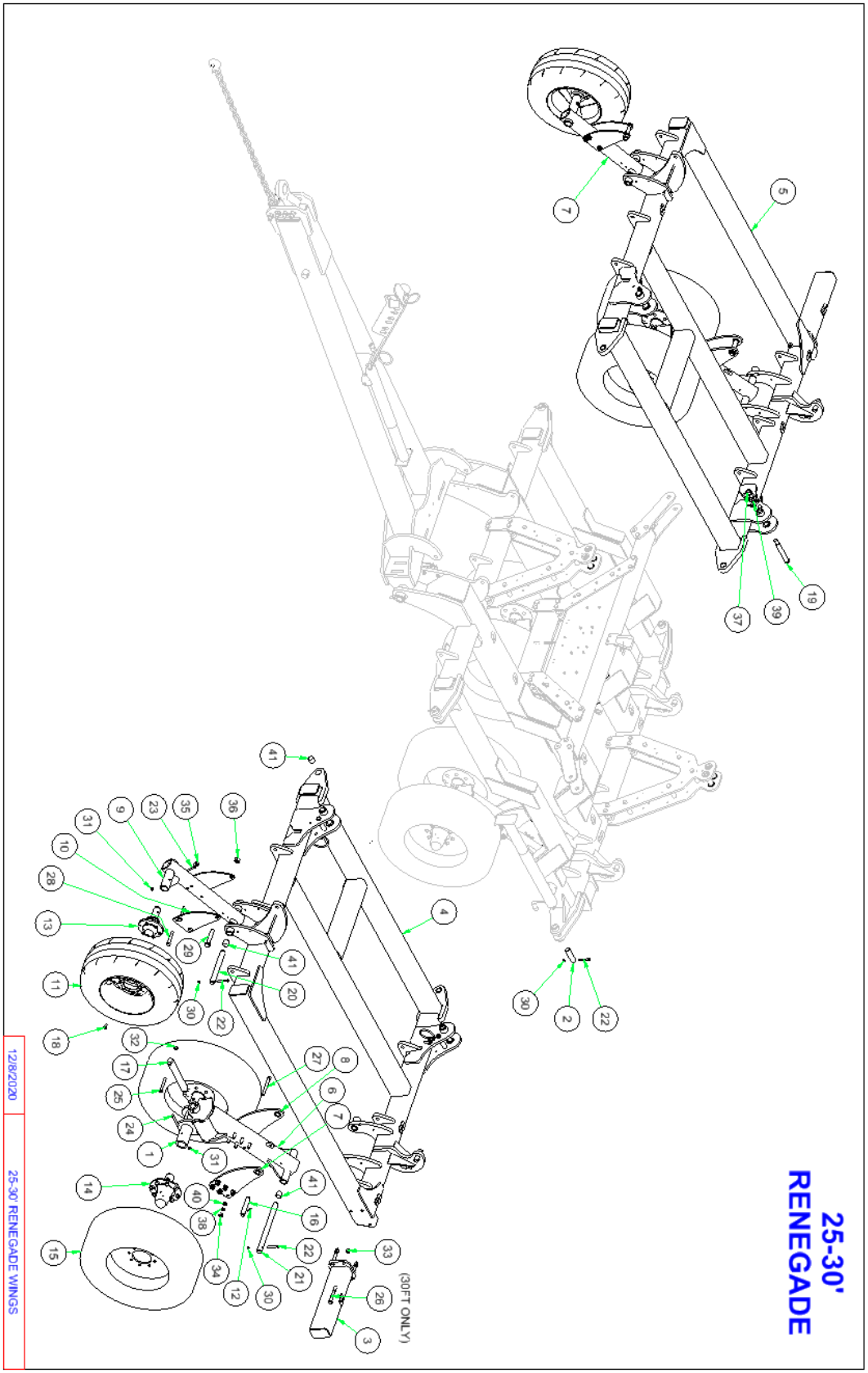
25-30'
RENEGADE
(30FT ONLY)
12/8/2020
25-30' RENEGADE WINGS

ITEM	PN	DESCRIPTION
1	8B1270B	OSC AXLE SPNDLE HLDR 2.5"
2	8B2025	PIN 1-1/2" X 5.375" YZ
3	8B2495P	ATTCHMNT ARM MNT EXT-PTD
4	8B2525P	FRAME WING RNGD 25'-30' L-PTD
5	8B2527P	FRAME WING RNGD 25'-30' R-PTD
6	8B2540	LIFTARM OSC AXL-RNGD
6	8B2540B	LIFT ARM OSC AXL RNGD AFTER SERIAL NUMBER 24000
7	8B2542L	CYL ATTCH 285/70R19.5 W/BUSH-L
8	8B2542R	CYL ATTCH 285/70R19.5 W/BUSH-R
9	8B2550	LIFTARM GAGEWHL
10	8B2551	CYL ATTCH 280/70R15
11	8D3046	IF280/70R15 134D ON 15X10X6WHL
12	8D9108	ROLL PIN 1/4 X 2" YLW ZNC
13	8K1100	HUB&AXLE ASSY 614(GBGI-2"RCVR)
14	8K1105	HUB&AXLE ASSY HD812(2.5"RCVR)
15	8K7410	285/70R 19.5 ON 19.5X8.25X8WHL
16	8K9110	PIN 1-1/4 X 6-13/16" HRDND
17	8P3910	PIN 2 X 13-1/2" HARDENED
18	8R6914	BOLT WHEEL 9/16"-18 UNF- 1.25"
19	8T3300	PIVOT BOLT CHSLTRP&WNGLFT YZ
20	8T3620	PIN 1-1/2 X 12-1/2" HRDND&ZINC

ITEM	PN	DESCRIPTION
21	8T3640	PIN 1-1/2 X 19" HARDENED 98-
22	8X0044	BOLT 7/16-14NC X 3-1/2"GR5 ZDI
23	8X0070	BOLT 1/2-13NC X 3-1/4" GR5 YZ
24	8X0074	BOLT 1/2-13NC X 4-1/2" GR5 ZDI
25	8X0095	BOLT 5/8-11NC X 5" GR5 ZDI
26	8X0116	BOLT 3/4-10NC X 6" GR5 YZ
27	8X0121A	BOLT 3/4-10NCX6-1/2" -1.38"THD
28	8X0122	BOLT 3/4-10NC X 4-1/2" GR5 YZ
29	8X0138	BOLT 1-8NC X 5-1/2" GR5 ZDI
30	8X0234	NUT 7/16"-14NC NY-LOCK GR2 ZDI
31	8X0242	NUT 1/2"-13NC NY-LOCK GR2 YZ
32	8X0253	NUT 5/8"-11NC NY-LOCK GR2 YZ
33	8X0261	NUT 3/4"-10NC NY-LOCK GR2 YZ
34	8X0265	NUT 3/4"-10NC CNTRLOCK GR2 YZ
35	8X0266	NUT 3/4"-10NC SER FLANG GR2 YZ
36	8X0281	NUT 1"-8NC NY-LOCK GR2 YZ
37	8X0282	NUT 1"-14TPI TOPLOCK GR B Z
38	8X0306	LOCKWASHER 3/4" YLW ZNC
39	8X0316	WASHER 1" SAE FLAT YZ
40	8X0317	WASHER 3/4" SAE FLAT YZ
41	8X3130	SLEEVEBRNG 1.656X1.5" ID- 1.5"
41	8X3132	SLEEVEBRNG 2.00X1.5” ID-2.0” AFTER SERIAL NUMBER 240000
41	8T5345	*WING ONLY*SPLITSTEELBUSH 2X1.5”ID-1.5” AFTER SERIAL NUMBER 240000

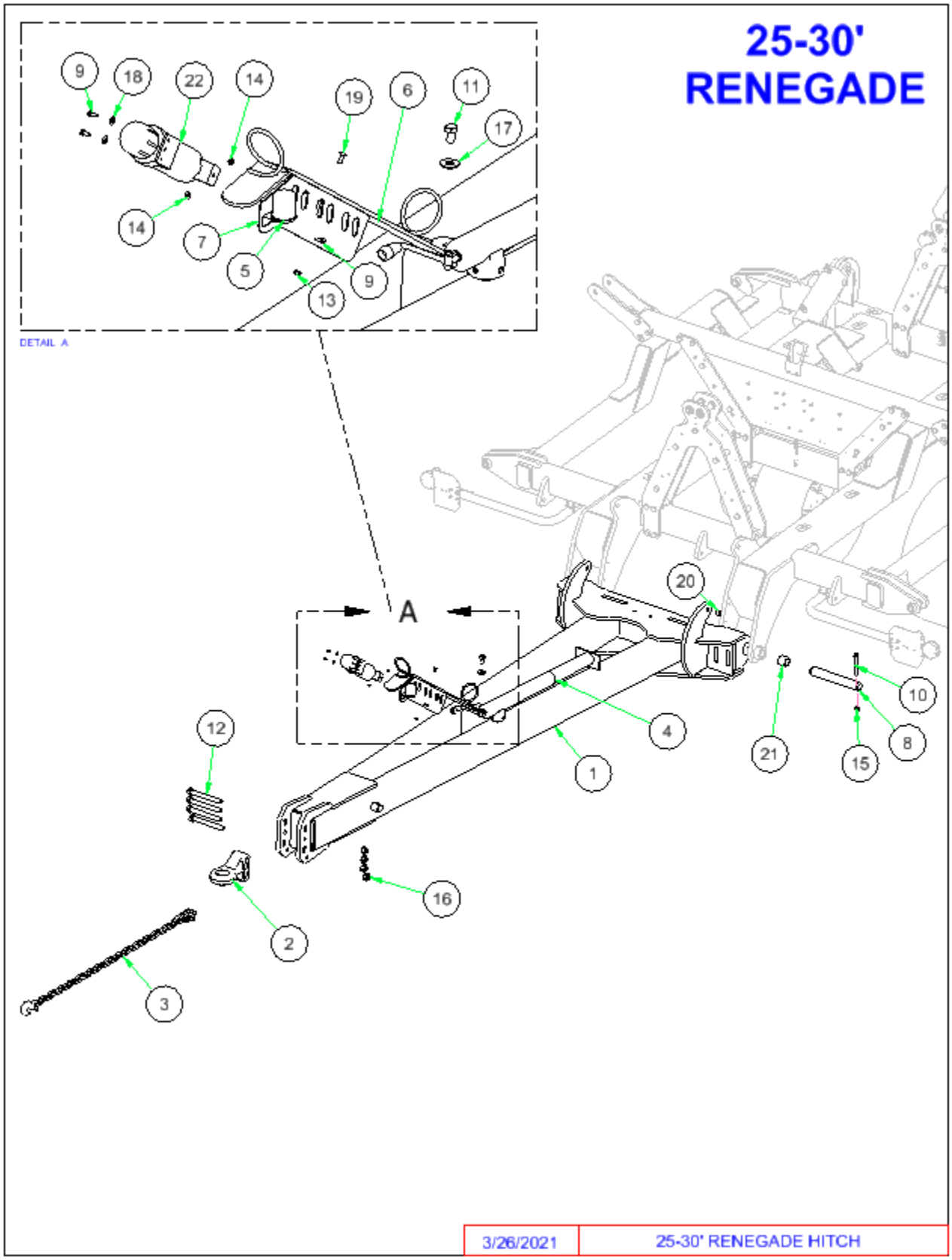
25-30'
RENEGADE
DETAIL A
A
9
18
22
14
19
6
11
17
14
7
5
9
13
20
10
8
15
21
4
1
12
16
2
3
3/26/2021
25-30' RENEGADE HITCH

ITEM	PN	DESCRIPTION
1	8B2505P	HITCH VRT RNGD 25'-30'-PTD
2	8D0760	HITCH ARTIC. BALL CAT 4
3	8D2470	SAFETY CHAIN 7/16" X 5'
4	8D8523	JACK 8000# DROPLEG 5/8X4.25PIN
5	8K8067	DUST CAP FOR 7PIN CONNECT00-
6	8N0700	HYD HOSE ARM
7	8N0703	HYD HOSE TIP HOLDER-3 PAIR
8	8P3910	PIN 2 X 13-1/2" HARDENED
9	8X0021	BOLT 5/16-18NC X 3/4" GR5 ZDI
10	8X0095	BOLT 5/8-11NC X 5" GR5 ZDI
11	8X0110	BOLT 3/4-10NC X 1-1/4" GR5 YZ
12	8X0146	BOLT 1-8NCX8.5" W/1.5"THD GR5ZDI
13	8X0203	NUT 3/8"-16NC SERFLANG GR2 YZ
14	8X0211	NUT 5/16"-18NC SERFLANG GR2 YZ
15	8X0253	NUT 5/8"-11NC NY-LOCK GR2 YZ
16	8X0281	NUT 1"-8NC NY-LOCK GR2 YZ
17	8X0318	WASHER 3/4"(13/16"ID)FLAT YZ
18	8X0329	WASHER 5/16"(3/8" ID)FLAT YZ
19	8X1110	CRG 3/8-16NC X 1" GR2 ZN
20	8X3110	SLEEVEBRNG 1.125X1" ID- 1"
21	8X3140	SLEEVEBRNG 2.188X2" ID- 2"
21	8X3142	SLEEVEBRNG 2.50X2.0"ID- 2.0" AFTER SERIAL NUMBER 240000
22	8Z1010	MANUAL HOLDER TUBE

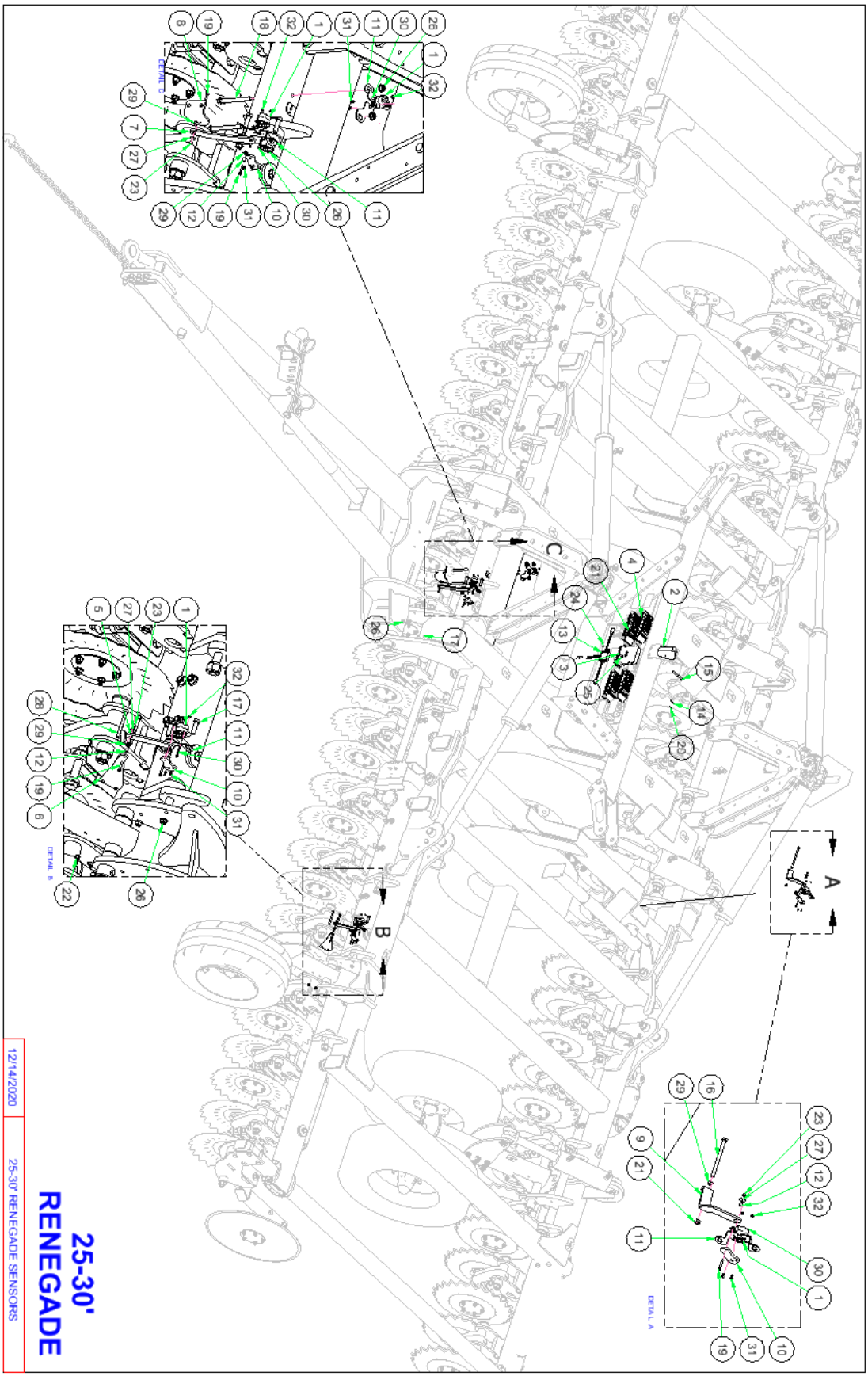
DETAIL A
DETAIL B
DETAIL C
A
B
C
25-30'
RENEGADE
12/14/2020
25-30' RENEGADE SENSORS

ITEM	PN	DESCRIPTION
1	8B0037	ROTARY SENSOR
5	8B2835	SENSOR LINK-GAGEWHL
6	8B2836	SENSOR LINK MNT-GAGEWHL
7	8B2840	SENESOR LINK-HITCH ANGLE
8	8B2841	SENSOR LINK MNT-HITCH ANGLE
9	8B2847	SENSOR LINK-DEPTH CNTRL 25-30'
10	8B2850	SENSOR LINK-UNIVERSAL
11	8B2855	ROTARY SENSOR MNT
12	8B2860	SLEEVE #10 IDX3/8"ODX.40"
13	8K8030A	MODULE AG ENHNCDW/BRAKE6PIN08-
14	8X0010B	SCREW, ALLEN 1/4-20 X 1-1/4" ZP
15	8X0015	BOLT 3/8-16NC X 3-3/4" GR5 ZDI
16	8X0017	BOLT 3/8-16NC X 5" GR5 ZDI
17	8X0066	BOLT 1/2-13NC X 1-3/4" GR5 ZDI
18	8X0073	BOLT 1/2-13NC X 5" GR5 YZ
19	8X0163	SCREW #10 X 1-1/4" HEX/WSHR HD
20	8X0170	SCREW 8 X .75" FLANGE HD
21	8X0202	NUT 3/8"-16NC NY-LOCK GR2 YZ
22	8X0203	NUT 3/8"-16NC SERFLANG GR2 YZ
23	8X0206	NUT 10-24 HEX YZ NYLOCK
24	8X0208	NUT 8-32 HEX YZ SER FLNG
25	8X0222	NUT 1/4"-20NC NY-LOCK GR2 YZ
26	8X0246	NUT 1/2"-13NC SERFLANG GR2 YZ
27	8X0335	WASHER FENDER #10
28	8X1140	CRG 3/8-16NC X 4" GR2 ZN
29	8X3080	FLANGEBRNG .469X.375"ID- .25"
30	8XM0001	SCREW,SS - BTTN HEAD M5 X 35MM
31	8XM0110	SCREW,SS - BTTN HEAD M6 X 10MM
32	8XM0200	NUT,SS - NY-LOCK M5

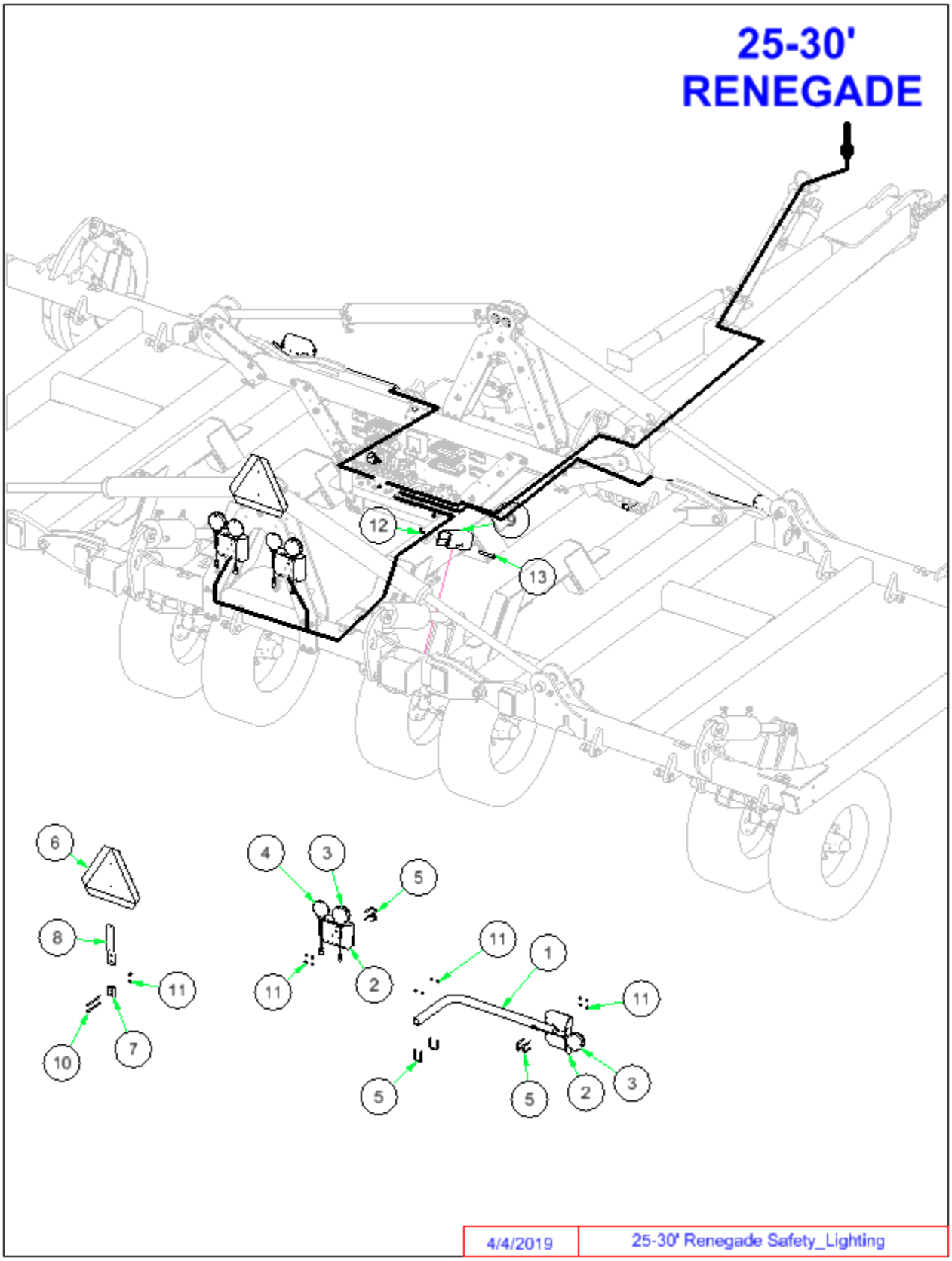
25-30'
RENEGADE
12
9
13
6
4
3
5
8
11
11
2
11
1
11
10
7
5
5
2
3
4/4/2019
25-30' Renegade Safety_Lighting

ITEM	PN	DESCRIPTION
1	8K8005	TUBE LGHT BRKT SHRT 1.5SQ PNTD
2	8K8020	MOUNTNG BRCKT LIGHT 00-
3	8K8090B	LIGHT LED AMBER 2WR DTSCH 12-
4	8K8095B	LIGHT LED RED 3WIRE DTSCH 12-
5	8L0258	U-BOLT 5/16 X 1-1/2 X 2-1/2"SQ
6	8S1120	SIGN SLOW MOVING VEHICLE(SMV)
7	8S1124	MOUNTING SOCKET SMV SIGN ZDI
8	8S1126	MNT SPADE W/HRDWR SMV SIGN
9	8T4350	TRNS LCK W/UHMW10.5"(2.4RD)
10	8X0030	BOLT 5/16-18NC X 5" GR5 ZDI
11	8X0211	NUT 5/16"-18NC SERFLANG GR2 YZ
12	8X0402	HAIR PIN CLIP 1/8 X 2-9/16"
13	8X0440	CLEVIS PIN 5/8 X 3-7/8" ZDI

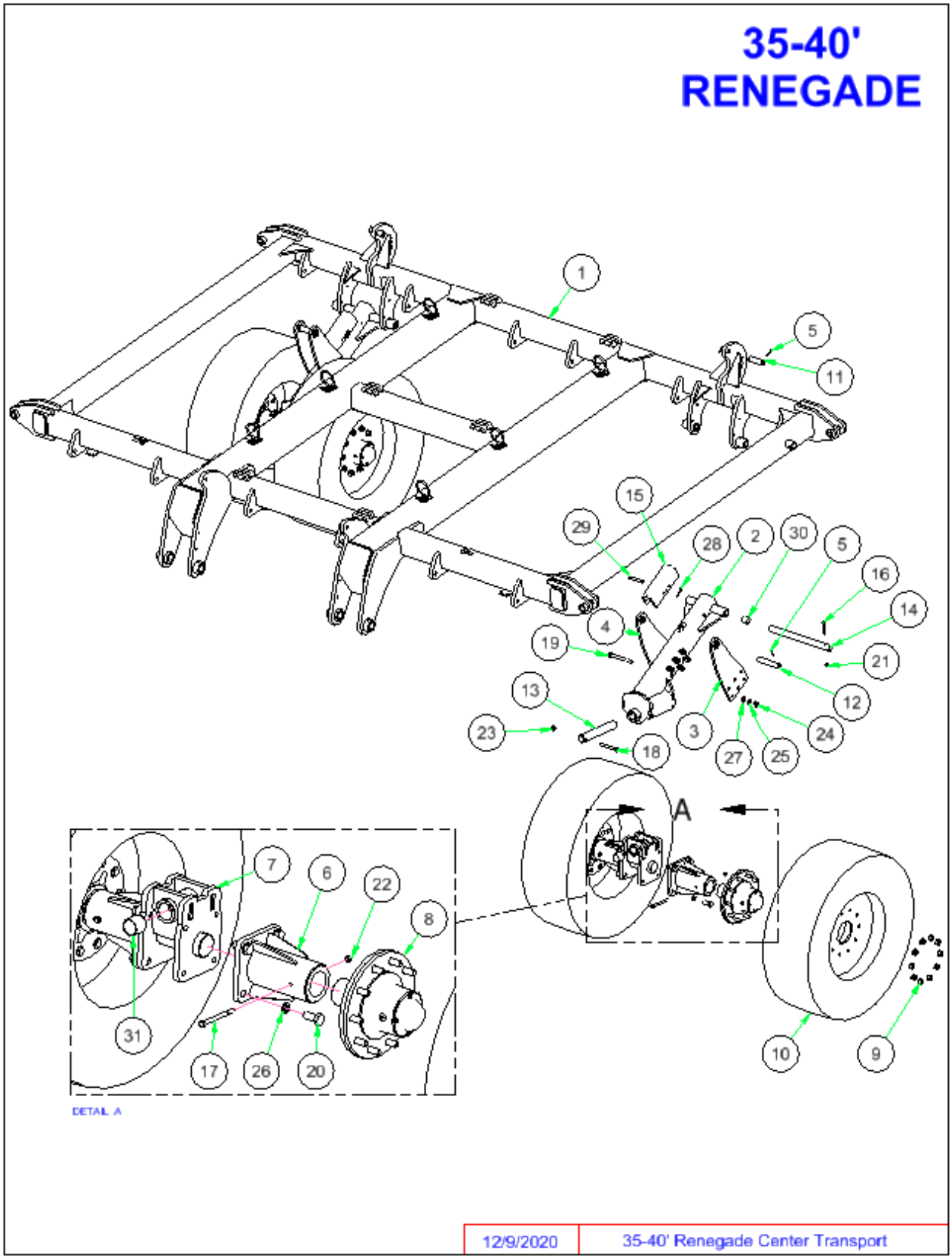
35-40'
RENEGADE
1
5
11
15
29
28
2
30
5
16
14
4
19
21
13
12
23
3
24
18
27
25
A
7
6
22
8
31
17
26
20
10
9
DETAIL A
12/9/2020
35-40' Renegade Center Transport

ITEM	PN	DESCRIPTION
1	8B2510P	FRAME CENTER RNGD 35'-40'-PTD
2	8B2540	LIFTARM OSC AXL-RNGD
2	8B2540B	LIFT ARM OSC AXL RNGD AFTER SERIAL NUMBER 240000
3	8B2541L	CYL ATTCH-385/65R22.5-L
4	8B2541R	CYL ATTCH-385/65R22.5-R
5	8D9108	ROLL PIN 1/4 X 2" YLW ZNC
6	8J4167	OSC AXLE SPNDLE HLDR 3.375"
6	8J4167B	OSC AXLE SPNDL HLDR 3.375"NRRW CHANGED 6/8/2021
7	8J4168B	OSC AXLE SPNDLE HLDR MNT
7	8J1468C	OSC AXLE SPNDLE HLDR MNT AFTER SERIAL NUMBER 240000
8	8K1109	SPINDLE W/H1010 15K
9	8K7216	NUT 3/4"-16UNF FLANGE
10	8K7540	VF385/65R22.5-22.5X11.75X10WHL
11	8K9106	PIN 1-1/4 X 4-3/8" HARDENED
12	8K9110	PIN 1-1/4 X 6-13/16" HRDND
13	8P3910	PIN 2 X 13-1/2" HARDENED
14	8T3640	PIN 1-1/2 X 19" HARDENED 98-
15	8T4350	TRNS LCK W/UHMW10.5"(2.4RD)
16	8X0044	BOLT 7/16-14NC X 3-1/2"GR5 ZDI
17	8X0075	BOLT 1/2-13NC X 6" GR5 ZDI
18	8X0095	BOLT 5/8-11NC X 5" GR5 ZDI
19	8X0121A	BOLT 3/4-10NCX6-1/2" -1.38"THD
20	8X0130	BOLT 7/8-9NC X 2" GR5 ZDI
21	8X0234	NUT 7/16"-14NC NY-LOCK GR2 ZDI
22	8X0242	NUT 1/2"-13NC NY-LOCK GR2 YZ
23	8X0253	NUT 5/8"-11NC NY-LOCK GR2 YZ
24	8X0265	NUT 3/4"-10NC CNTRLOCK GR2 YZ
25	8X0306	LOCKWASHER 3/4" YLW ZNC
26	8X0307	LOCKWASHER 7/8" YLW ZNC
27	8X0317	WASHER 3/4" SAE FLAT YZ
28	8X0402	HAIR PIN CLIP 1/8 X 2-9/16"
29	8X0440	CLEVIS PIN 5/8 X 3-7/8" ZDI
30	8X3130	SLEEVEBRNG 1.656X1.5" ID- 1.5"
31	8X3140	SLEEVEBRNG 2.188X2" ID- 2"
31	8X3142	SLEEVEBRNG 2.50X2.0”ID-2” AFTER SERIAL NUMBER 240000

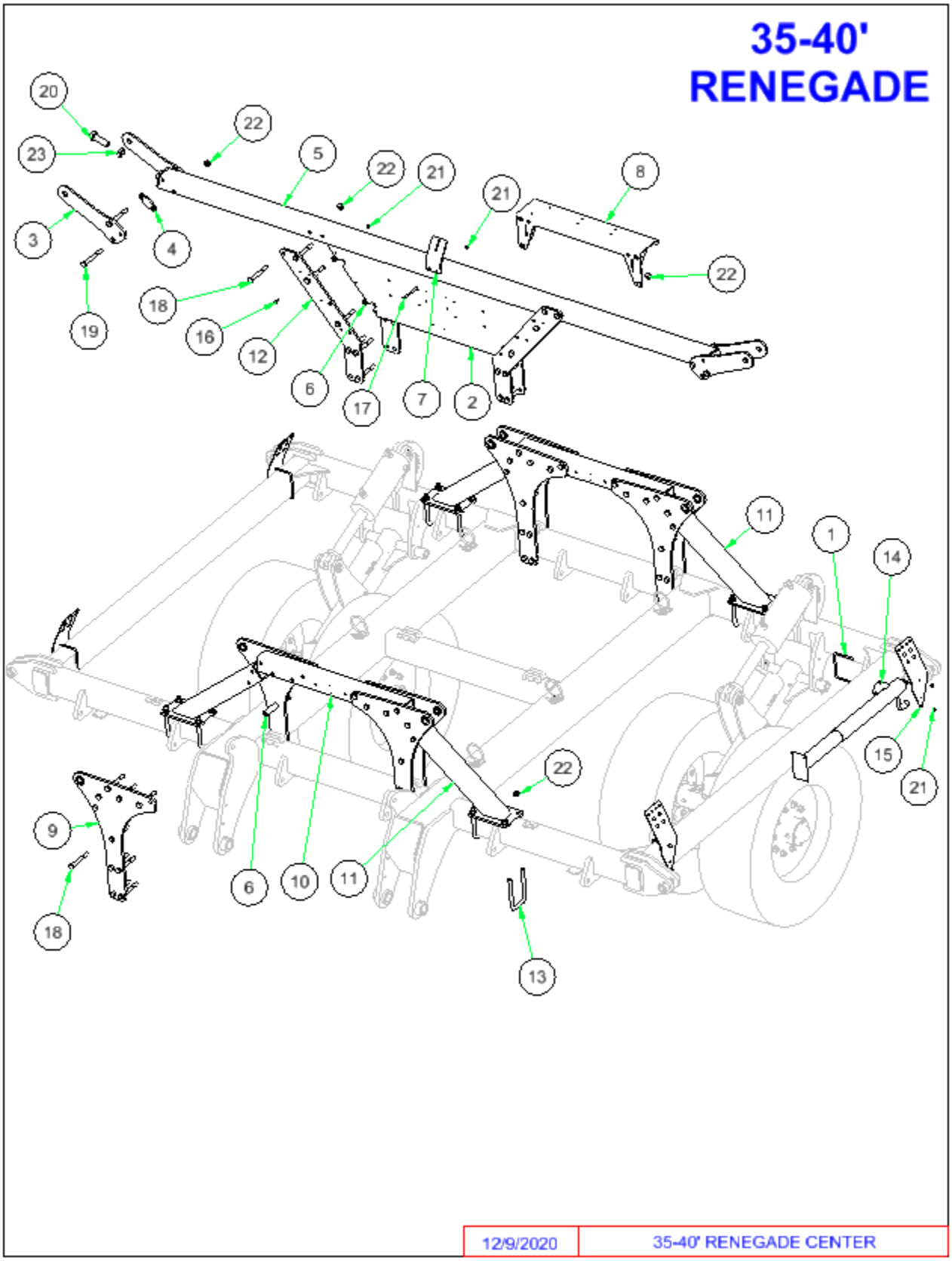
35-40'
RENEGADE
20
23
22
5
22
21
21
8
3
4
22
18
19
16
12
6
17
7
2
11
1
14
15
21
22
9
6
10
11
18
13
12/9/2020
35-40' RENEGADE CENTER

ITEM	PN	DESCRIPTION
1	8A1155	U-BOLT 3/8 X 6-1/16 X 5" SQ
2	8B0031	CONTROLLER MNT PANEL
3	8B1215	WING LOCK TAB VRT
4	8B1217	WING LOCK TAB SPCR
5	8B2530	WING REST TUBE 35'-40'
6	8B2536	SPACER .76"ID X 4"
7	8B2537B	ANTENNA MNT
8	8B2538	HYD VLV BLOCK MOUNT
9	8B2555B	CYL ATTCH WINGFOLD 35'-40'
10	8B2556	WINGFOLD CONNECTOR TUBE
11	8B2557	WINGFOLD BRACE
12	8B2560	TRANSREST MNT PLATE
13	8D0340	U-BOLT 3/4 X 4-1/16 X 7-3/4" SQ
14	8D8523	JACK 8000# DROPLEG 5/8X4.25PIN
15	8N0201	BULKHEAD PLATE - WING
16	8X0004	BOLT 3/8-16NC X 1-1/4" GR5 YZ
17	8X0017	BOLT 3/8-16NC X 5" GR5 ZDI
18	8X0116	BOLT 3/4-10NC X 6" GR5 YZ
19	8X0121	BOLT 3/4-10NC X 6-1/2" GR5 YZ
20	8X0152	BOLT 1-1/4-7NC X 3.75 FULLTHD
21	8X0203	NUT 3/8"-16NC SERFLANG GR2 YZ
22	8X0266	NUT 3/4"-10NC SER FLANG GR2 YZ
23	8X0283	NUT JAM 1.25"-7NC GR2 ZDI

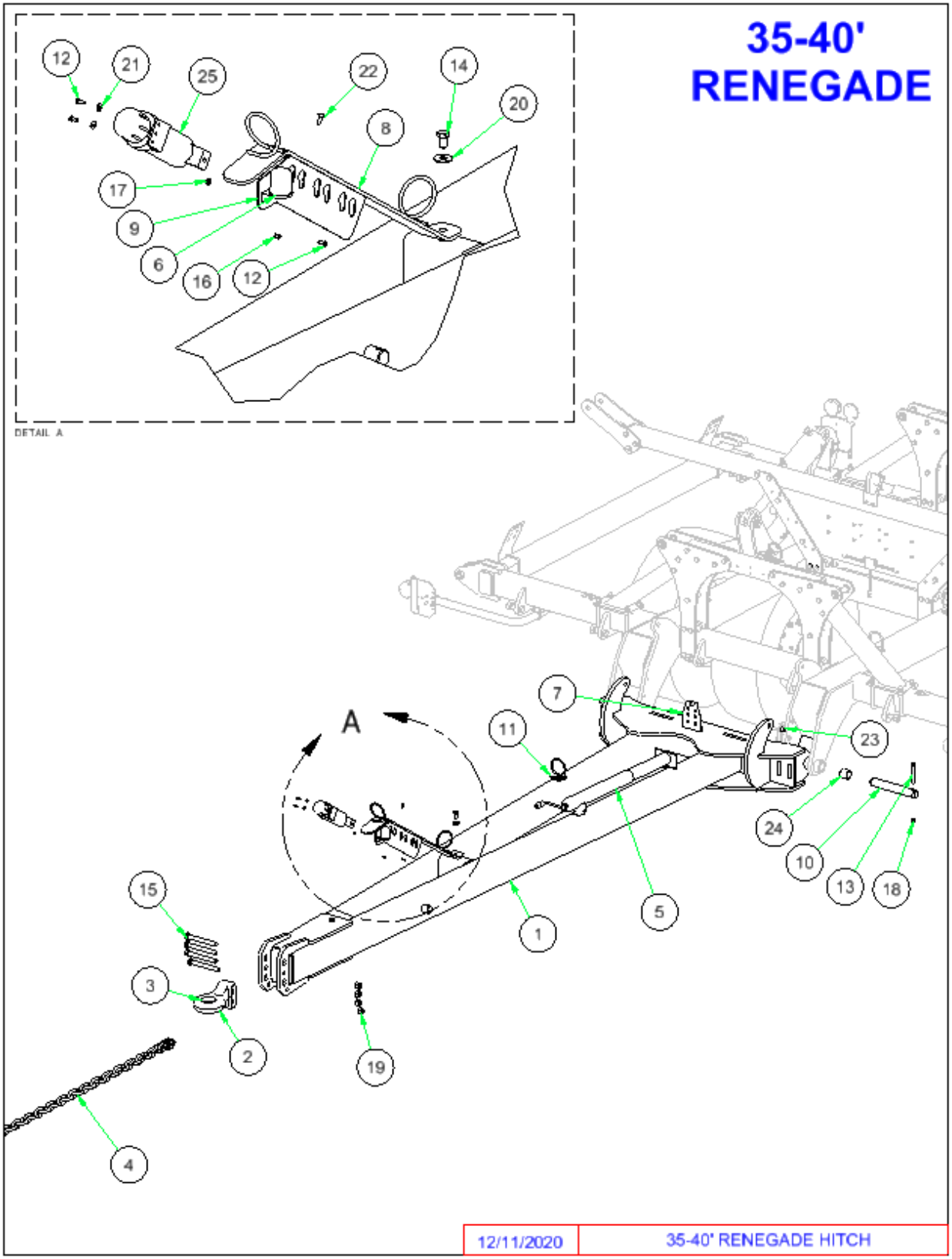
35-40'
RENEGADE
DETAIL A
A
12
21
25
22
14
20
8
17
9
6
16
12
7
11
23
24
10
13
18
15
5
1
3
2
19
4
12/11/2020
35-40' RENEGADE HITCH

ITEM	PN	DESCRIPTION
1	8B2500P	HITCH VRT RNGD 35'-40'-PNTD
2	8D0770	HITCH ARTIC. BALL CAT 5
3	8D0771	BUSHING 2"ID FOR 8D0770
4	8D2480	SAFETY CHAIN 61000# 5/8" X 66"
5	8D8523	JACK 8000# DROPLEG 5/8X4.25PIN
6	8K8067	DUST CAP FOR 7PIN CONNECT00-
7	8N0200	BULKHEAD PLATE - HITCH
8	8N0700	HYD HOSE ARM
9	8N0703	HYD HOSE TIP HOLDER-3 PAIR
10	8P3910	PIN 2 X 13-1/2" HARDENED
11	8S0700	SPRING, HOSE PROTECTOR LOOP
12	8X0021	BOLT 5/16-18NC X 3/4" GR5 ZDI
13	8X0095	BOLT 5/8-11NC X 5" GR5 ZDI
14	8X0110	BOLT 3/4-10NC X 1-1/4" GR5 YZ
15	8X0146	BOLT 1-8NCX8.5" W/1.5"THD GR5ZDI
16	8X0203	NUT 3/8"-16NC SERFLANG GR2 YZ
17	8X0211	NUT 5/16"-18NC SERFLANG GR2 YZ
18	8X0253	NUT 5/8"-11NC NY-LOCK GR2 YZ
19	8X0281	NUT 1"-8NC NY-LOCK GR2 YZ
20	8X0318	WASHER 3/4"(13/16"ID)FLAT YZ
21	8X0329	WASHER 5/16"(3/8" ID)FLAT YZ
22	8X1110	CRG 3/8-16NC X 1" GR2 ZN
23	8X3110	SLEEVEBRNG 1.125X1" ID- 1"
24	8X3140	SLEEVEBRNG 2.188X2" ID- 2"
24	8X3142	SLEEVEBRNG 2.50X2.0"ID- 2.0" AFTER SERIAL NUMBER 240000
25	8Z1010	MANUAL HOLDER TUBE

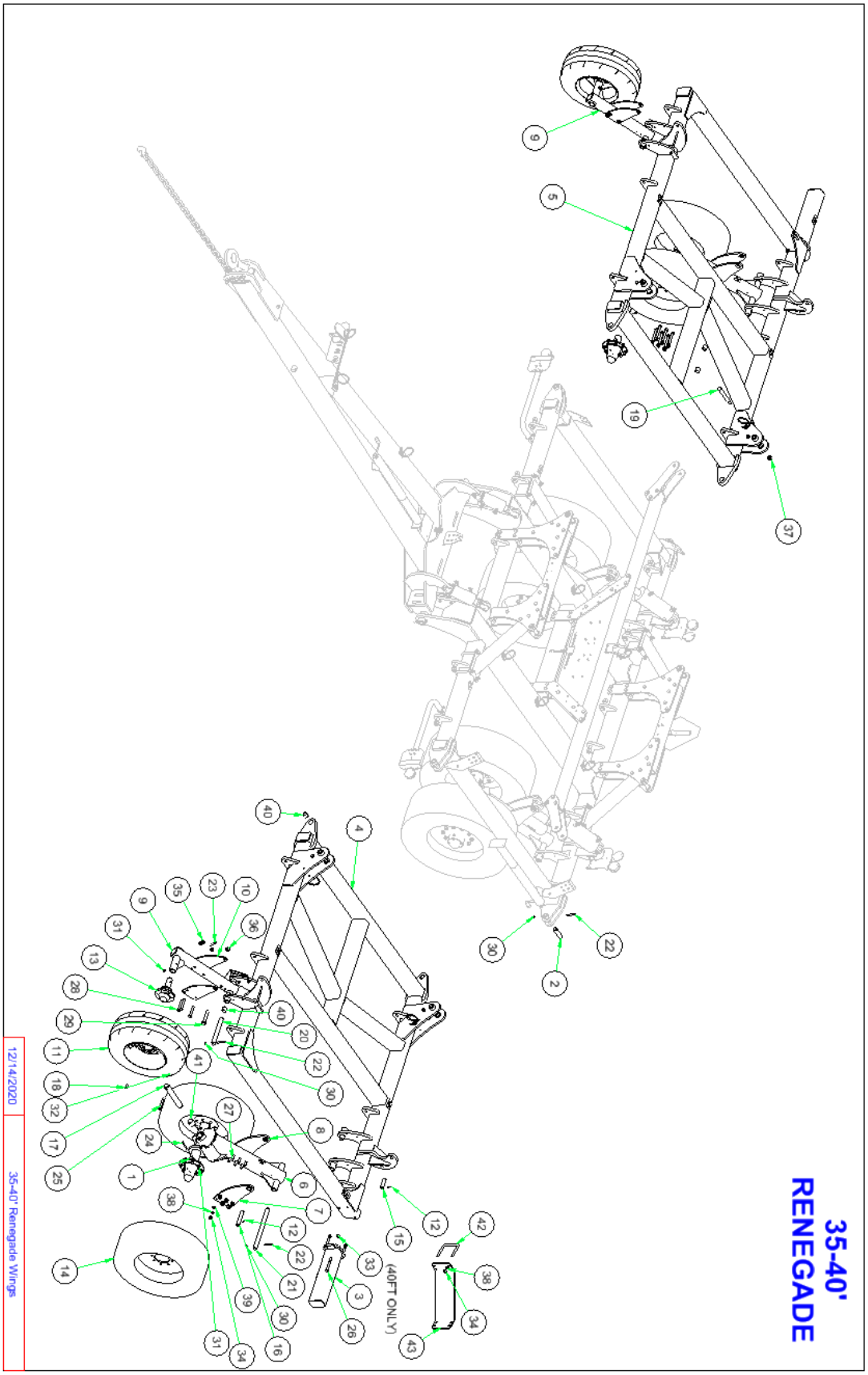
35-40'
RENEGADE
(40FT ONLY)
12/14/2020
35-40' Renegade Wings

ITEM	PN	DESCRIPTION
1	8B1270B	OSC AXLE SPNDLE HLDR 2.5"
2	8B2025	PIN 1-1/2" X 5.375" YZ
3	8B2495P	ATTCHMNT ARM MNT EXT-PTD
4	8B2520P	FRAME WING RNGD 35'-40' L-PTD
5	8B2522P	FRAME WING RNGD 35'-40' R-PTD
6	8B2540	LIFTARM OSC AXL-RNGD
7	8B2542L	CYL ATTCH 285/70R19.5 W/BUSH-L
8	8B2542R	CYL ATTCH 285/70R19.5 W/BUSH-R
9	8B2550B	LIFTARM GAGEWHL
10	8B2551	CYL ATTCH 280/70R15
11	8D3046	IF280/70R15 134D ON 15X10X6WHL
12	8D9108	ROLL PIN 1/4 X 2" YLW ZNC
13	8K1100	HUB&AXLE ASSY 614(GBGI-2"RCVR)
14	8K7410	285/70R 19.5 ON 19.5X8.25X8WHL
15	8K9106	PIN 1-1/4 X 4-3/8" HARDENED
16	8K9110	PIN 1-1/4 X 6-13/16" HRDND
17	8P3910	PIN 2 X 13-1/2" HARDENED
18	8R6914	BOLT WHEEL 9/16"-18 UNF- 1.25"
19	8T3300	PIVOT BOLT CHSLTRP&WNGLFT YZ
20	8T3620	PIN 1-1/2 X 12-1/2" HRDND&ZINC
21	8T3640	PIN 1-1/2 X 19" HARDENED 98-
22	8X0044	BOLT 7/16-14NC X 3-1/2"GR5 ZDI
23	8X0070	BOLT 1/2-13NC X 3-1/4" GR5 YZ
24	8X0074	BOLT 1/2-13NC X 4-1/2" GR5 ZDI
25	8X0095	BOLT 5/8-11NC X 5" GR5 ZDI
26	8X0116	BOLT 3/4-10NC X 6" GR5 YZ
27	8X0121A	BOLT 3/4-10NCX6-1/2" -1.38"THD
28	8X0122	BOLT 3/4-10NC X 4-1/2" GR5 YZ
29	8X0138	BOLT 1-8NC X 5-1/2" GR5 ZDI
30	8X0234	NUT 7/16"-14NC NY-LOCK GR2 ZDI

ITEM	PN	DESCRIPTION
31	8X0242	NUT 1/2"-13NC NY-LOCK GR2 YZ
32	8X0253	NUT 5/8"-11NC NY-LOCK GR2 YZ
33	8X0261	NUT 3/4"-10NC NY-LOCK GR2 YZ
34	8X0265	NUT 3/4"-10NC CNTRLOCK GR2 YZ
35	8X0266	NUT 3/4"-10NC SER FLANG GR2 YZ
36	8X0281	NUT 1"-8NC NY-LOCK GR2 YZ
37	8X0282	NUT 1"-14TPI TOPLOCK GR B Z
38	8X0306	LOCKWASHER 3/4" YLW ZNC
39	8X0317	WASHER 3/4" SAE FLAT YZ
40	8X3130	SLEEVEBRNG 1.656X1.5" ID- 1.5"
40	8T5345	SPLITSTEELBUSH 2X1.5 ID- 1.5”AFTER SERIAL NUMBER 240000
41	8X3140	SLEEVEBRNG 2.188X2" ID- 2"
42	8C1755	U-BOLT 3/4 X 6-1/16 X 6" SQ
43	8B2492	BRACE ARM MNT EXT

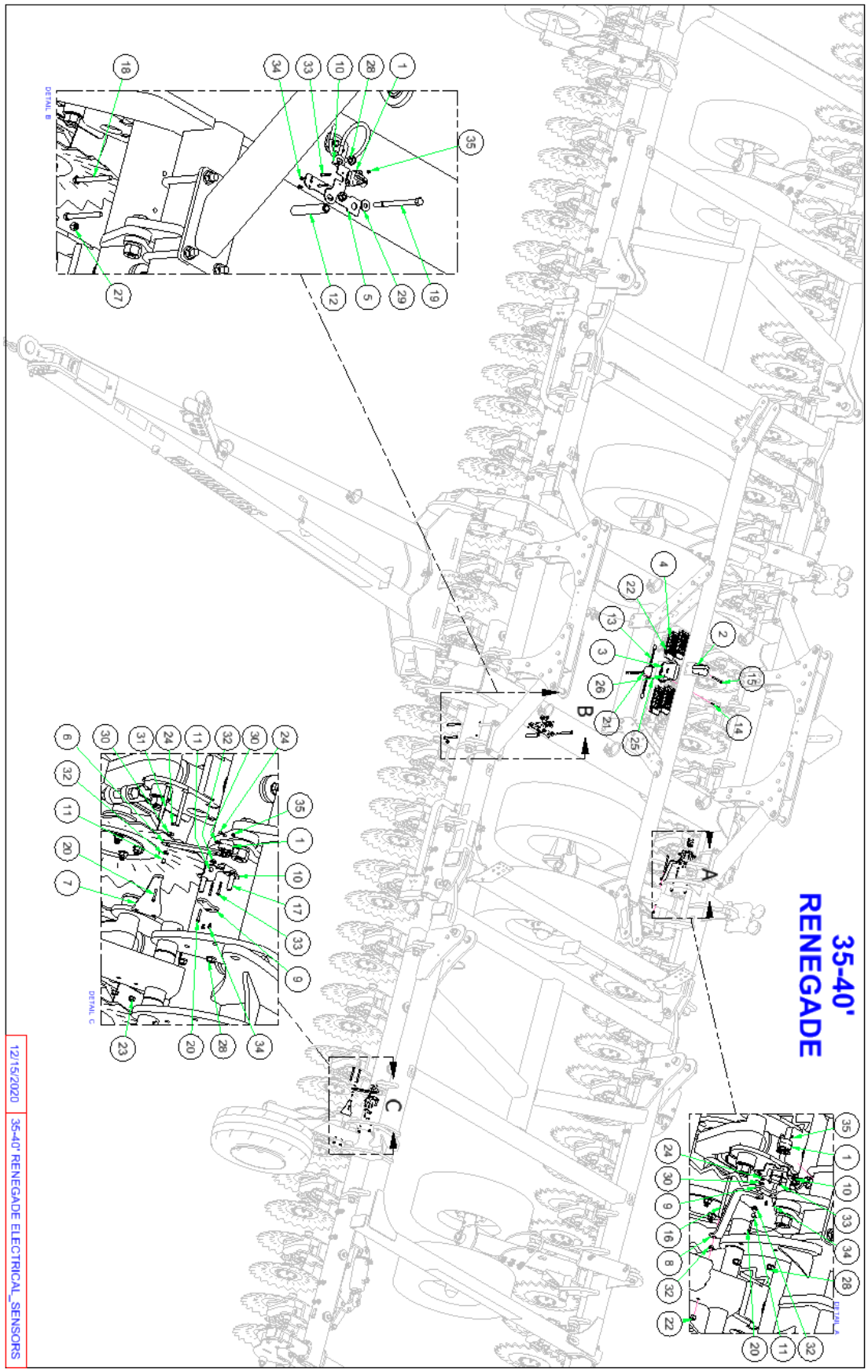
35-40'
RENEGADE
DETAIL A
DETAIL B
DETAIL C
A
B
C
12/15/2020
35-40' RENEGADE ELECTRICAL_SENSORS

ITEM	PN	DESCRIPTION
1	8B0037	ROTARY SENSOR
5	8B2831	SENSOR LINK-BLADE ANGLE-FLAT
6	8B2835	SENSOR LINK-GAGEWHL
7	8B2836	SENSOR LINK MNT-GAGEWHL
8	8B2845	SENSOR LINK-DEPTH CNTRL
9	8B2850	SENSOR LINK-UNIVERSAL
10	8B2855	ROTARY SENSOR MNT
11	8B2860	SLEEVE #10 IDX3/8"ODX.40"
12	8B2865	STANDOFF .56"IDX1"ODX4.85"
13	8K8030A	MODULE AG ENHNCDW/BRAKE6PIN08-
14	8X0010B	SCREW, ALLEN 1/4-20 X 1-1/4" ZP
15	8X0015	BOLT 3/8-16NC X 3-3/4" GR5 ZDI
16	8X0017	BOLT 3/8-16NC X 5" GR5 ZDI
17	8X0066	BOLT 1/2-13NC X 1-3/4" GR5 ZDI
18	8X0073	BOLT 1/2-13NC X 5" GR5 YZ
19	8X0082	BOLT 1/2-13NC X 6-1/2" GR5 YZ
20	8X0163	SCREW #10 X 1-1/4" HEX/WSHR HD
21	8X0170	SCREW 8 X .75" FLANGE HD
22	8X0202	NUT 3/8"-16NC NY-LOCK GR2 YZ
23	8X0203	NUT 3/8"-16NC SERFLANG GR2 YZ
24	8X0206	NUT 10-24 HEX YZ NYLOCK
25	8X0208	NUT 8-32 HEX YZ SER FLNG
26	8X0222	NUT 1/4"-20NC NY-LOCK GR2 YZ
27	8X0242	NUT 1/2"-13NC NY-LOCK GR2 YZ
28	8X0246	NUT 1/2"-13NC SERFLANG GR2 YZ
29	8X0330	WASHER 17/32"ID X 1.25"OD YZ
30	8X0335	WASHER FENDER #10
31	8X1140	CRG 3/8-16NC X 4" GR2 ZN
32	8X3080	FLANGEBRNG .469X.375"ID- .25"
33	8XM0001	SCREW,SS - BTTN HEAD M5 X 35MM
34	8XM0110	SCREW,SS - BTTN HEAD M6 X 10MM
35	8XM0200	NUT,SS - NY-LOCK M5

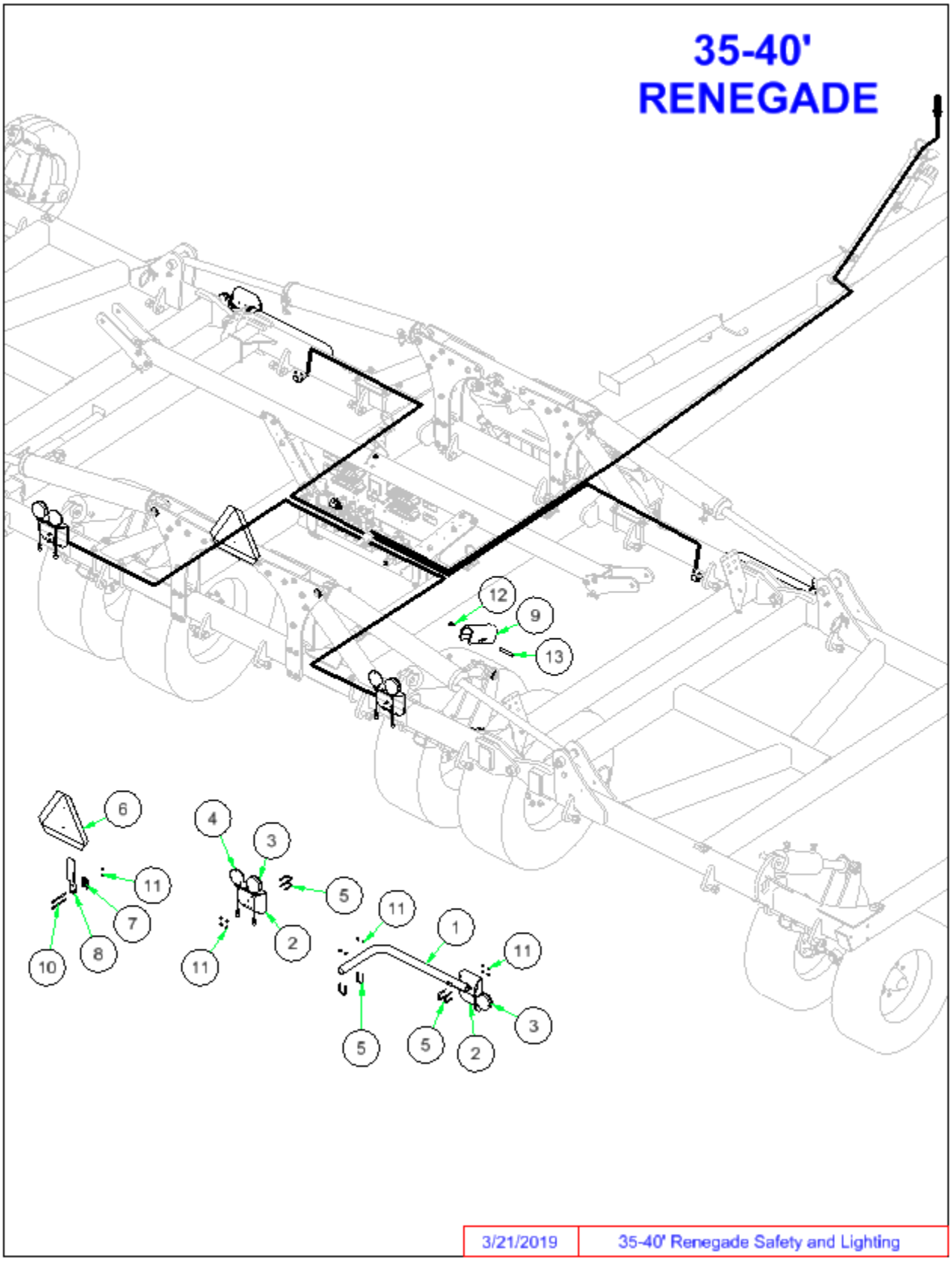
35-40'
RENEGADE
12
9
13
6
4
3
11
5
7
11
1
10
8
11
2
11
5
5
2
3
3/21/2019
35-40' Renegade Safety and Lighting

ITEM	PN	DESCRIPTION
1	8K8005	TUBE LGHT BRKT SHRT 1.5SQ PNTD
2	8K8020	MOUNTNG BRCKT LIGHT 00-
3	8K8090B	LIGHT LED AMBER 2WR DTSCH 12-
4	8K8095B	LIGHT LED RED 3WIRE DTSCH 12-
5	8L0258	U-BOLT 5/16 X 1-1/2 X 2-1/2"SQ
6	8S1120	SIGN SLOW MOVING VEHICLE(SMV)
7	8S1124	MOUNTING SOCKET SMV SIGN ZDI
8	8S1126	MNT SPADE W/HRDWR SMV SIGN
9	8T4350	TRNS LCK W/UHMW10.5"(2.4RD)
10	8X0030	BOLT 5/16-18NC X 5" GR5 ZDI
11	8X0211	NUT 5/16"-18NC SERFLANG GR2 YZ
12	8X0402	HAIR PIN CLIP 1/8 X 2-9/16"
13	8X0440	CLEVIS PIN 5/8 X 3-7/8" ZDI

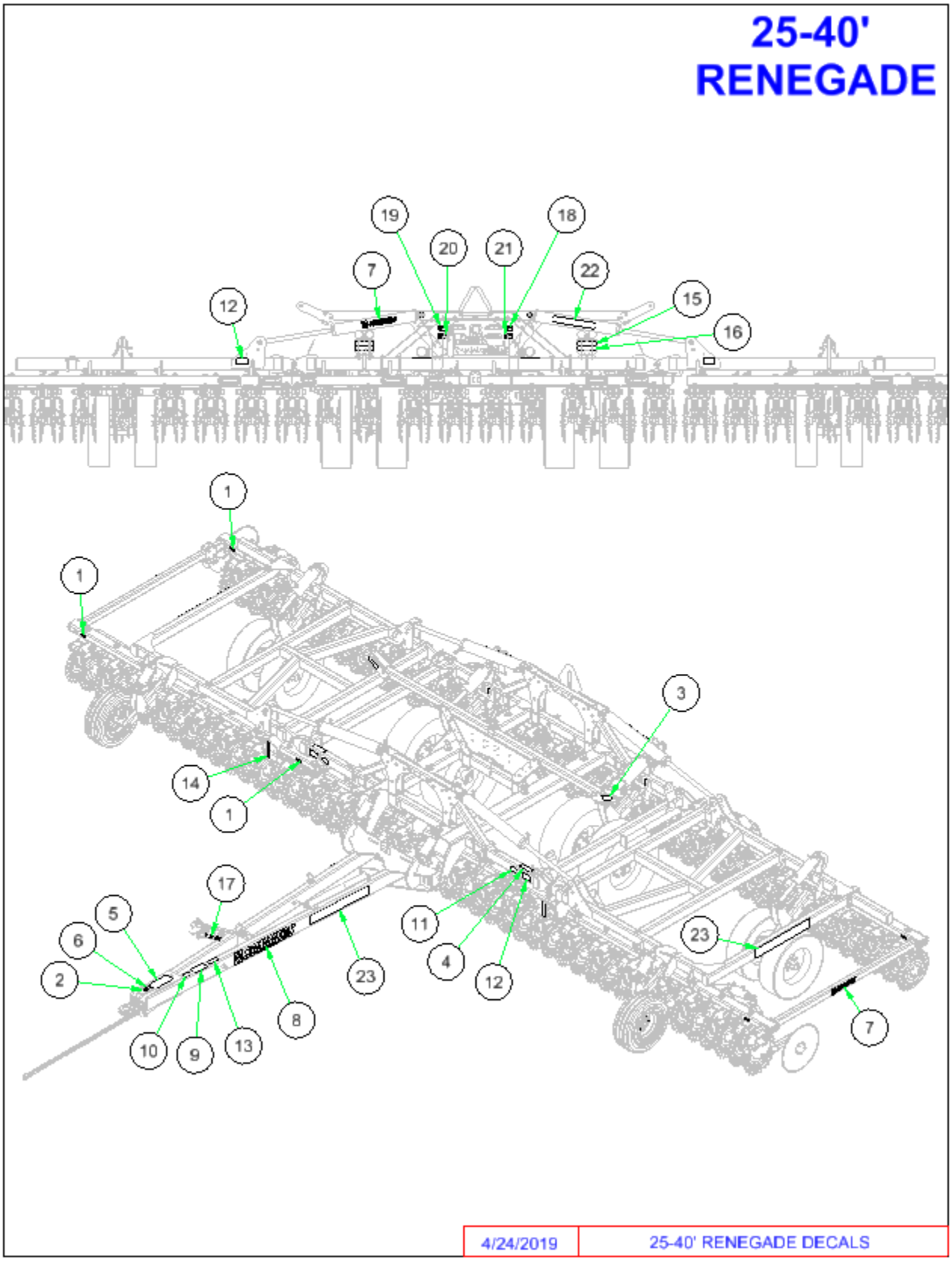
25-40'
RENEGADE
19
18
20
21
7
22
12
15
16
1
1
3
14
1
17
5
6
2
11
23
4
12
23
8
10
9
13
7
4/24/2019
25-40' RENEGADE DECALS

ITEM	PN	DESCRIPTION
1	8Z0046	PATENT PENDING DECAL
2	8Z0052	PATENT DECAL
3	8Z0075	TRANSPORT LOCK DECAL
4	8Z0087	DECAL"WARNING"PINCH POINT03-
5	8Z0099	WARNING JACK DECAL
6	8Z0100	MADE IN THE USA DECAL
7	8Z0202	3.5" SUMMERS DECAL
8	8Z0206	7.5" SUMMERS DECAL
9	8Z0276	GENERAL MACHINE CAUTION DECAL
10	8Z0340	REPHASING CYLINDERS DECAL
11	8Z0342	INSTALL CYL LOCKS DECAL
12	8Z0344	DECAL WING DANGER
13	8Z0346	ELECTROCUTION-TILLAGE EQUIP. DECAL
14	8Z0800	REFLECTOR AMBER ADHSVBCK98-
15	8Z0805	REFLCTR REDORANGE ADHSVBK99-
16	8Z0810	REFLECTOR RED ADHSV-BACK 98-
17	8Z2533	DECAL LIFT-AUX-WING
22	8Z2550	3" X 20.75" VRT-RNGD DECAL
23	8Z2555	5.5" X 20.75" VRT-RNGD DECAL

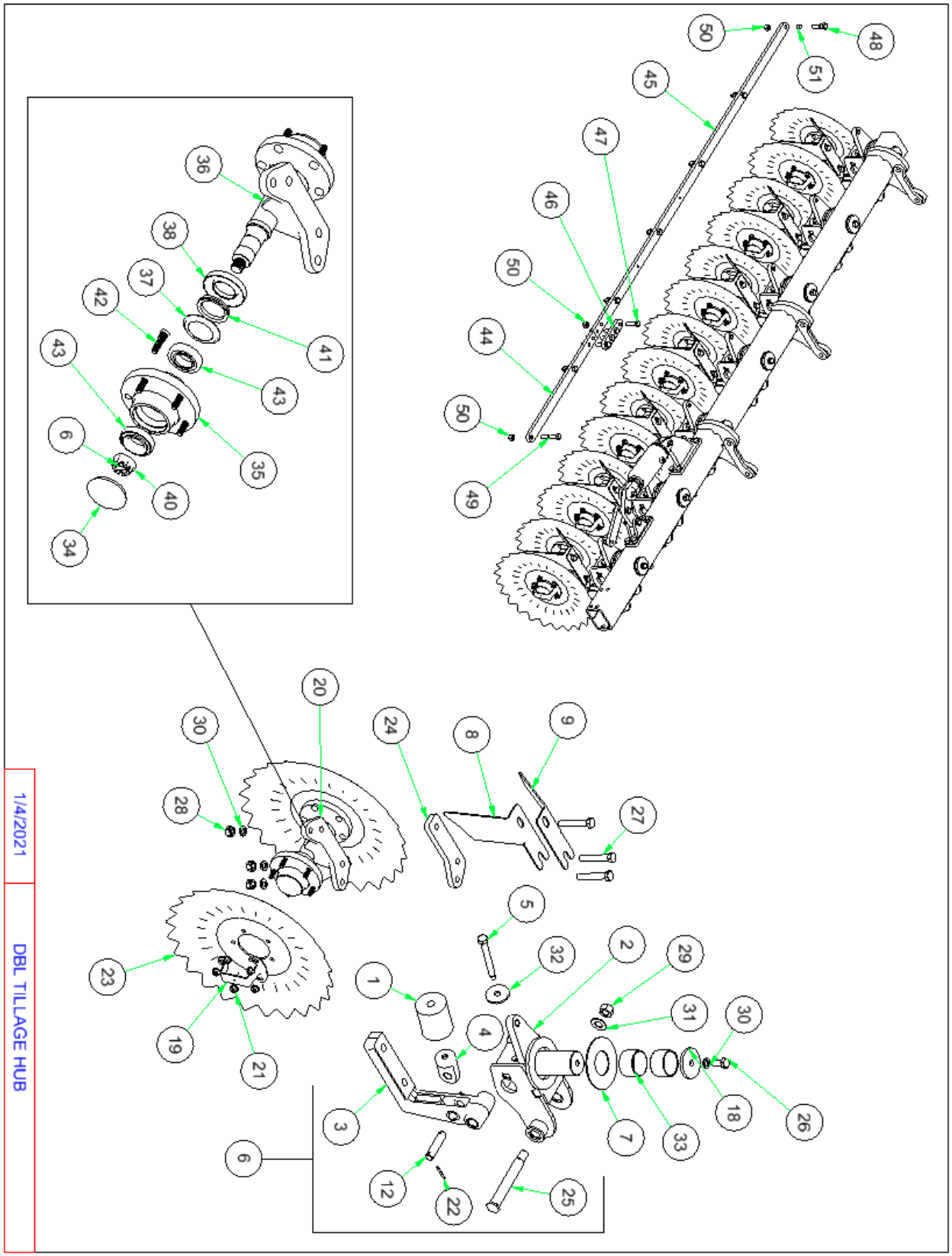
1/4/2021
DBL TILLAGE HUB

ITEM	PN	DESCRIPTION
1	8B0015	TRIP BUMP STOP
2	8B0063B	HOUSING 3"SHAFT-DISK TRIP-PTD
3	8B0065	ARM - DISK TRIP
4	8B0069	PRELOAD PIVOT W/BUSH
5	8B0070B	PRELOAD BOLT FLANGE TRIP
6	8B0080B	DISK TRIP-PIVOTING
7	8B0156B	3.06"X6.5"X .157" THRUST WASHER
8	8B2000P	VRT SCRAPER OUTER-L PNTD
9	8B2002P	VRT SCRAPER INNER-L PNTD
10	8B2005P	VRT SCRAPER OUTER-R PNTD
11	8B2007P	VRT SCRAPER INNER-R PNTD
12	8B2028	PIN 1" X 4.25 YZ
13	8B2800	BLADE ANGLE CYL ATTCH
14	8B2805	BLADE ANGLE LEVER MNT
15	8B2810	LINK-MASTER BLADE ANGLE
16	8B2815	LINK-BLADE ANGLE
17	8B2822	LINK-BLADE ANGLE LEVER
18	8B2825B	RETAINING CAP-PIVOT TRIP
19	8B3990B	DUST CAP GUARD 8B4000B/8B4001B
20	8B4000B	DBL TILLAGE HUB
21	8B4019	NUT NYLOCK FLNG 1/2"-20
22	8D9108	ROLL PIN 1/4 X 2" YLW ZNC
23	8K4922SM	22 X 6.5MM SAMURAI
24	8K4946	CLAMP FLAT DSK CHSL HUB
25	8T3300	PIVOT BOLT CHSLTRP&WNGLFT YZ
26	8X0105A	BOLT 3/4-10NC X 1.5" GR5 YZ

ITEM	PN	DESCRIPTION
27	8X0122	BOLT 3/4-10NC X 4-1/2" GR5 YZ
28	8X0265	NUT 3/4"-10NC CNTRLOCK GR2 YZ
29	8X0282	NUT 1"-14TPI TOPLOCK GR B Z
30	8X0306	LOCKWASHER 3/4" YLW ZNC
31	8X0316	WASHER 1" SAE FLAT YZ
32	8X0337	WASHER 3/4"ID X 3"OD- ZP
33	8X3150	SLEEVEBRNG 3.25X3" ID- 3"
34	8B4015B	DUST CAP
35	8B4017B	HUB HOUSING
36	8CC1592	DBL SPNDLE WLDMNT TILL HUB
37	8D5240	SEAL COUNTERFACE GBGI TILLAGE
38	8D5242	SEAL RETAINER GBGI TILLAGE 5BLT
39	8D5243	ROLL PIN 1/4 X 1-1/2"
40	8D5244	NUT FLANGE SLOTTED 1"-14
41	8D5246	V-SEAL GBGI TILL HUB
42	8D5247	STUD 1/2"-NF GBGI TILL HUB
43	8K7343	BEARING OUTER HD817 LM501349
44	8B2808	LINK BLADE 2H
45	8B2812	LINK BLADE 5H
46	8B2816	LINK BLADE BP
47	8X0111A	BOLT 3/4-10NC X 2-3/4" GR5 ZDI
48	8X0114	BOLT 3/4-10NC X 3" GR5 YZ
49	8X0118A	BOLT 3/4-10NC X 4-1/4" GR5 YZ
50	8X0261	NUT 3/4"-10NC NY-LOCK GR2 YZ
51	8X3102	SLEEVEBRNG .875X.75" ID- .75"

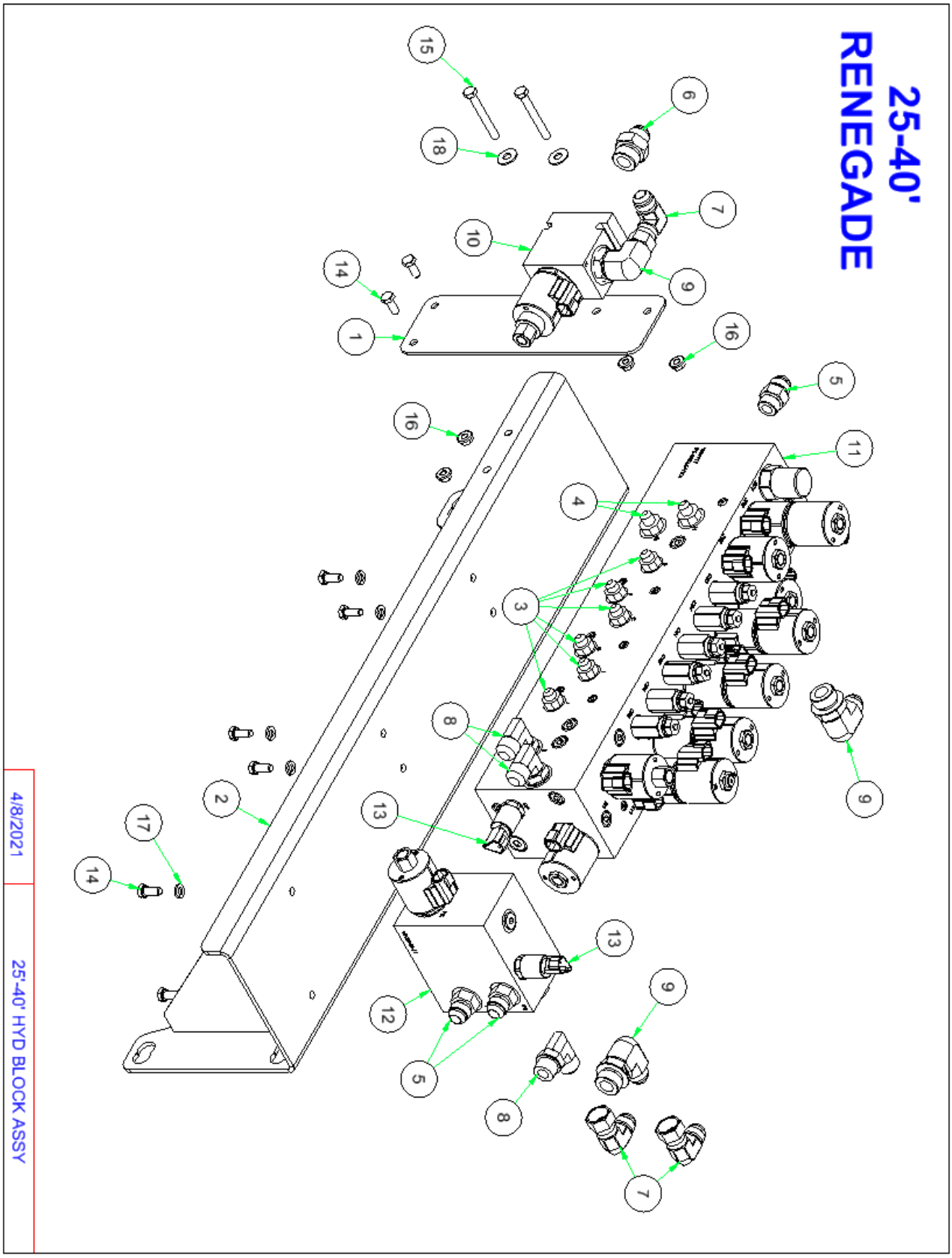
25-40'
RENEGADE
4/8/2021
25'-40' HYD BLOCK ASSY

ITEM	PN	DESCRIPTION
1	8B2535	DEPTH CNTRL VLV MNT
2	8B2538	HYD VLV BLOCK MOUNT
3	8B9110	SUB-ASSY HYD BLOCKS
3	8J5500	9/16"-18 ORB X #6 JIC(M) STR
4	8J5510	3/4"-16 ORB X #6 JIC(M) STR
5	8J5540	7/8"-14 ORB X #10 JIC(M) STR
6	8J5550	1-1/16" - 12ORBX#10JIC(M)STR
7	8J5710	#10 JIC(F-SW)X#10 JIC(M)90*ADP
8	8J6030	7/8"-14 ORB X #10 JIC(M)90*ADP
9	8J6050	1-1/16" - 12ORBX#10JIC(M)90*AD
10	8N7020	POPPET VALVE 2WAY PROPORTIONAL
11	8N7025	AUX VALVE 5 FUNCTION
12	8N7030	ADJ DN PRSSR MNFLD PROPRTIONAL
13	8N7100	TRANSDUCER 0-5000PSI
14	8X0021	BOLT 5/16-18NC X 3/4" GR5 ZDI
15	8X0024	BOLT 5/16-18NC X 2-1/2" GR5 YZ
16	8X0211	NUT 5/16"-18NC SERFLANG GR2 YZ
17	8X0300	LOCKWASHER 5/16" YLW ZNC
18	8X0329	WASHER 5/16"(3/8" ID)FLAT YZ

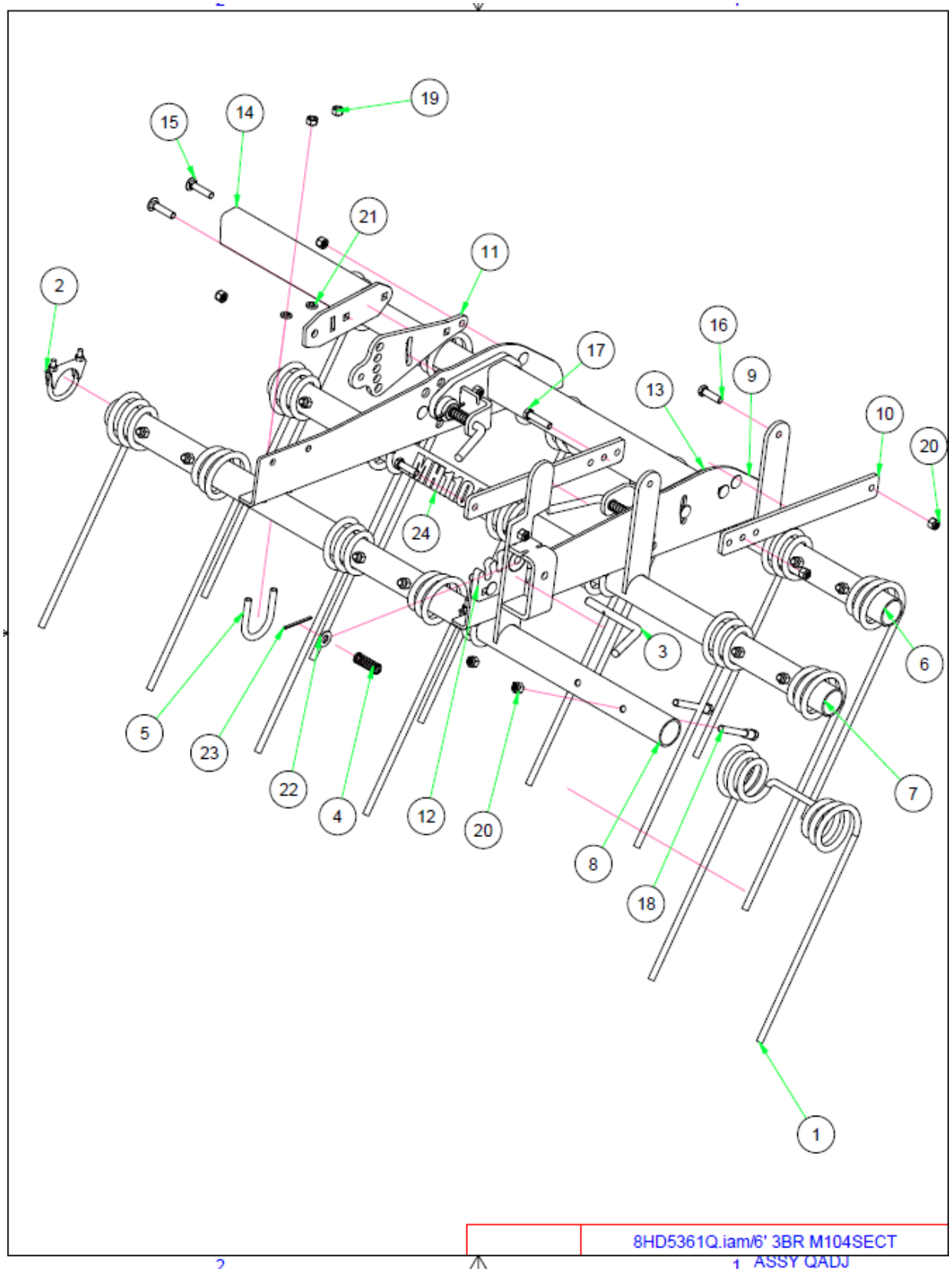
19
15
14
21
11
2
16
17
9
13
10
20
24
3
6
5
23
22
4
12
20
8
18
7
1
8HD5361Q.iam/6' 3BR M104SECT
ASSY QADJ

ITEM	PN	DESCRIPTION
1	8H1180S	HARROW TOOTH 1/2 X 20" M104/SH
2	8HD0080	PIPE CLAMP 2-1/2"ID PLATED ZDI
3	8HD0150	PIN
4	8HD0160	COMPRESSION SPRING
5	8HD0200	U-BOLT 1/2 X 2-3/8 X 3-9/16" RND
6	8HD5052	1ST PIPE W/LVR 6' 3OR4BR
	8HD5072	1ST PIPE W/LVR 8' 104/6 3OR4BR
	8HD5082	1ST PIPE W/LVR10' 104/6 3OR4BR
7	8HD5054	2ND PIPE W/LVR 6' 3OR4BR
	8HD5074	2ND PIPE W/LVR 8' 104/6 3OR4BR
	8HD5084	2ND PIPE W/LVR10' 104/6 3OR4BR
8	8HD5056Q	3RD PIPE/LVR6' 3BR104/6QADJ
	8HD5076Q	3RD PIP/LVR8' 3BR104/6 QADJ00-
	8HD5086Q	3RDPIP/LVR10' 3BR104/6 QADJ00-
9	8HD5111B	SIDE PLT 1/4"3BR QADJ LEFT
10	8HD5115	ADJUSTABLE CONNECTING BAR
11	8HD5132	PITCH ADJ REINF PLATE 23-
12	8HD5135	TINE ANGL ADJ PLATE 22-
13	8HD5141	CROSS TUBE W/FLATS 6' QADJ
	8HD5151	CROSS TUBE W/FLATS 8' QADJ13-
	8HD5161	CROSS TUBE W/FLATS 10' QADJ13-
14	8HD5181	EXT BRKT QADJ 2ND ARM 15"
15	8X0065A	CRG 1/2-13NC X 2" GR5 ZDI
16	8X0066	BOLT 1/2-13NC X 1-3/4" GR5 ZDI
17	8X0067	BOLT 1/2-13NC X 2-1/4" GR5 ZDI
18	8X0079	BOLT 1/2-13X4-1/8"SHOULDR GR2ZDI
19	8X0240	NUT 1/2"-13NC HEX GR2 YZ
20	8X0242	NUT 1/2"-13NC NY-LOCK GR2 YZ
21	8X0303	LOCKWASHER 1/2" YLW ZNC
22	8X0323	WASHER 5/8" SAE FLAT YZ
23	8X0519	ROLL PIN 3/16 X 3" ZINC CLEAR
24	8Z0114	MH1104 DECAL

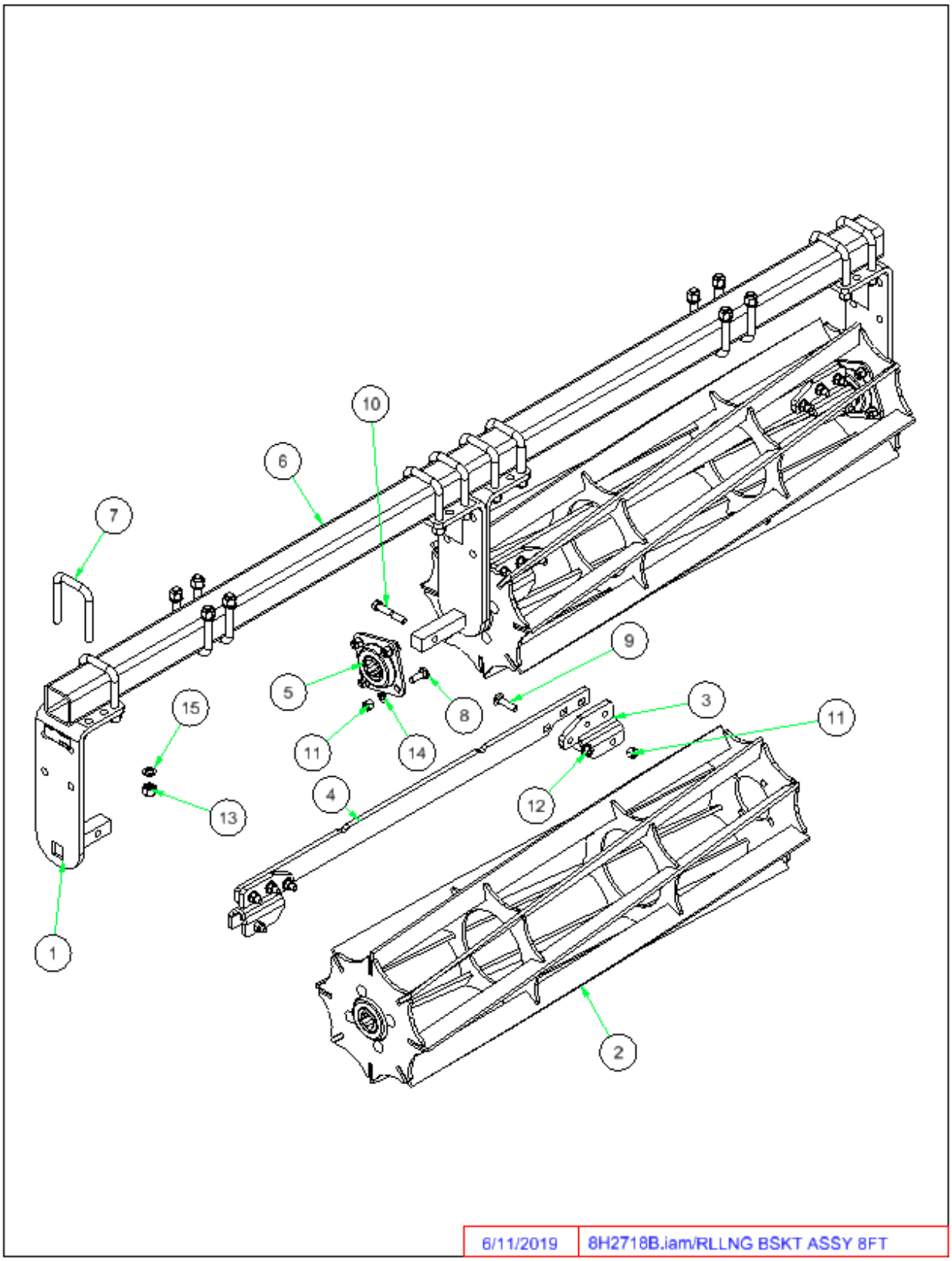
1
2
3
4
5
6
7
8
9
10
11
11
12
13
14
15
6/11/2019
8H2718B.iam/RLLNG BSKT ASSY 8FT

ITEM	PN	DESCRIPTION
1	8H2601B	RLLNG BSKT ENDPLATE 4SCRPR
2	8H2634	RLLNG BSKT 4' REEL ONLY
	8H2636	RLLNG BSKT 6' REEL ONLY
3	8H2660B	RLLING BSKT SCRAPR MNT
4	8H2664	4' BSKT SCRAPER (40.5")
	8H2666	6' BSKT SCRAPER (63.5")
5	8H2703	BEARING 1-1/4" SQ FLNG4BLT
6	8H2706	TUBE SQ 3 X 4T- 70" BSKT MNT
	8H2708	TUBE SQ 3 X 4T- 94" BSKT MNT
	8H2710	TUBE SQ 3 X 4T- 118" BSKT MNT
7	8S0358	U-BOLT 5/8 X 3-1/16 X 4-1/2" SQ.
8	8X0064	CRG 1/2-13NC X 1-1/2" GR5 YZ
9	8X0065	CRG 1/2-13NC X 2" GR5 ZDI
10	8X0069	BOLT 1/2-13NC X 3" GR5 ZDI
11	8X0242	NUT 1/2"-13NC NY-LOCK GR2 YZ
12	8X0244	NUT 1/2"-13NC FLANG TOP LOCK Z
13	8X0253	NUT 5/8"-11NC NY-LOCK GR2 YZ
14	8X0303	LOCKWASHER 1/2" YLW ZNC
15	8X0304	LOCKWASHER 5/8" YLW ZNC
16	8Z0046	PATENT PENDING DECAL

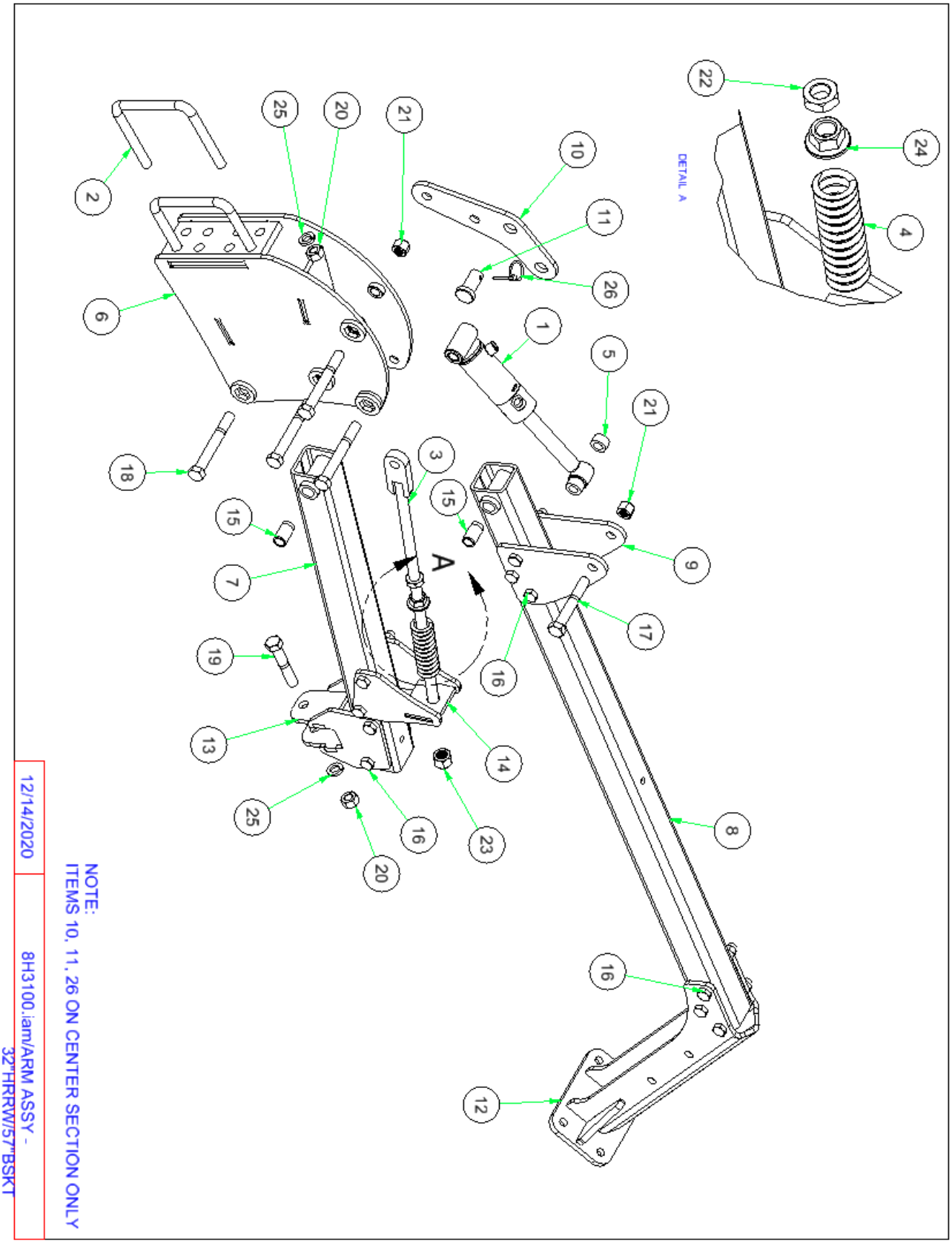
DETAIL A
A
NOTE:
ITEMS 10, 11, 26 ON CENTER SECTION ONLY
12/14/2020
8H3100.iam/ARM ASSY -
32"HRRW/57"BSKT

ITEM	PN	DESCRIPTION
1	8B2175	HYD CYL 2.0 X 1.75" HYD BSKT
2	8C1755	U-BOLT 3/4 X 6-1/16 X 6" SQ
3	8H1290	BOLT-SPRINGROD 7/8" X 29"
4	8H1295	SPRING-COMP - 1.71"ODX7"X.262"
5	8H2005	CYLINDER SPACER
6	8H3000	MNT HEAD HRRW/HYD BSKT
7	8H3010	ARM, HRRW- 32"
8	8H3020	ARM, BSKT- 57"
9	8H3021	CYL ATTCH-HYD BSKT ARM
10	8H3025	STL 3/8 X 9 5/8 - 9 7/8"
11	8H3028	PIN 1" X 2.375"
12	8H3030	RLLNG BSKT ATTCH ARM
13	8H3032	HRRW ATTCH CLAMP
14	8H3033	HRRW SPRINGROD ATTCH
15	8H3040	SUB-ASSY HRRW ARM-32"
15	8H3080	SUB-ASSY HYD BSKT ARM-57"
15	8W1897	NYLATRON 1"ODX .76"ID- 1-3/4"
16	8X0095	BOLT 5/8-11NC X 5" GR5 YZ
17	8X0113	BOLT 3/4-10NC X 5" GR5 YZ
18	8X0116	BOLT 3/4-10NC X 6" GR5 YZ
19	8X0118	BOLT 3/4-10NC X 4" GR5 ZDI
20	8X0260	NUT 3/4"-10NC HEX GR2 YZ
21	8X0261	NUT 3/4"-10NC NY-LOCK GR2 YZ
22	8X0269	NUT 7/8"-9NC JAM GR2 ZDI
23	8X0271	NUT 7/8"-9NC NY-LOCK GR2 YZ
24	8X0274	NUT 7/8"-9NC SERFLANG GR2 YZ
25	8X0306	LOCKWASHER 3/4" YLW ZNC
26	8X0492	LYNCH PIN 3/16 X 1-1/4" YZ

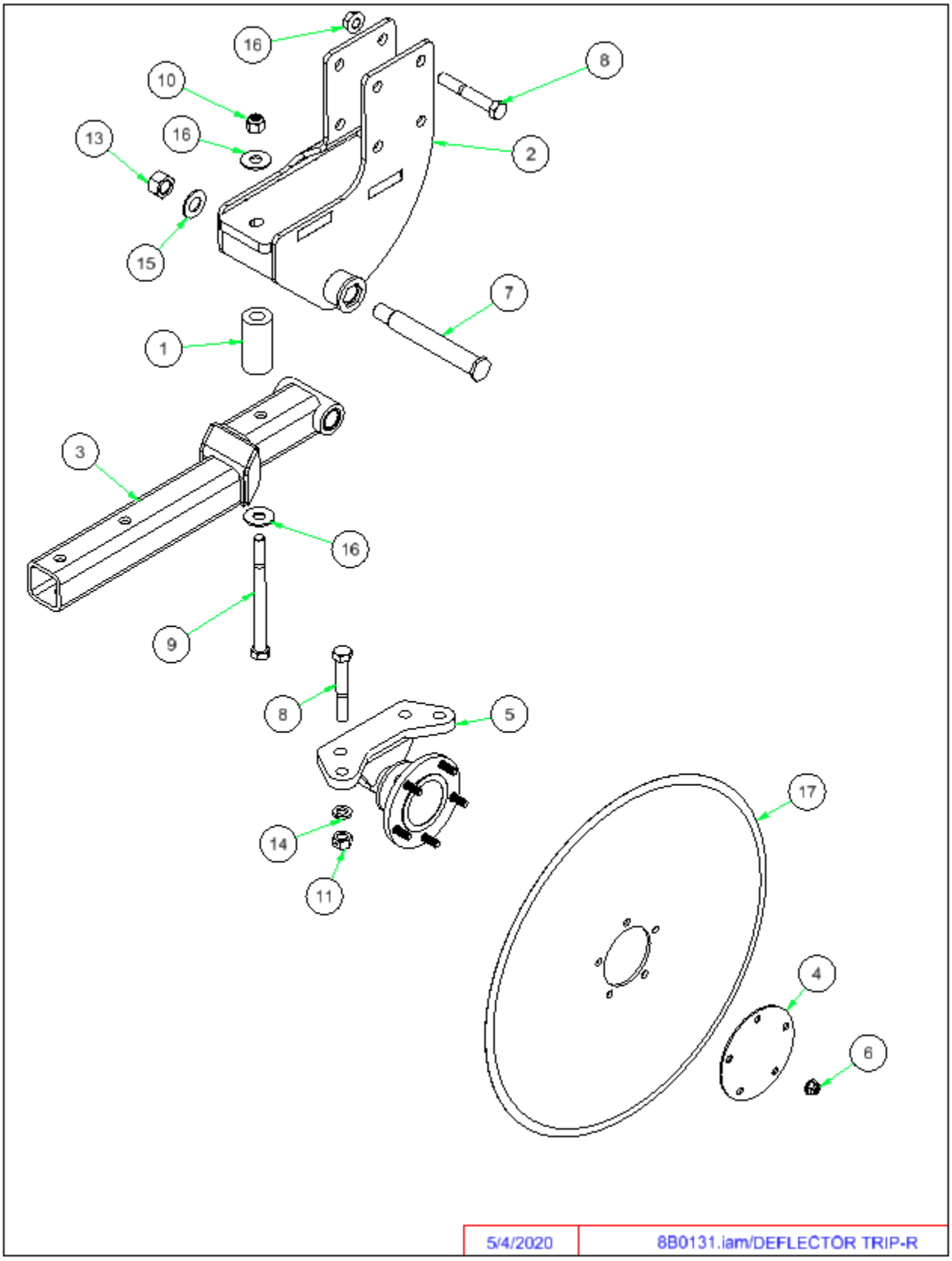
16
10
13
16
15
8
2
7
1
3
16
9
8
5
17
14
11
4
6
5/4/2020
8B0131.iam/DEFLECTOR TRIP-R

ITEM	PN	DESCRIPTION
1	8B0050	SPRING URETHANE 2"ODX4"
2	8B0120	DEFLECTOR TRIP HOUSING
3	8B0125	ARM - DEFLECTOR TRIP
4	8B3990	DUST CAP GUARD 8B4000/8B4001
4	8B3990B	DUST CAP GUARD 8B4000B/8B4001B
5	8B4001	SNGL TILLAGE HUB MAINTFREE
5	8B4001B	SNGL TILLAGE HUB
6	8B4019	NUT NYLOCK FLNG 1/2"-20
7	8T3300	PIVOT BOLT CHSLTRP&WNGLFT YZ
8	8X0113	BOLT 3/4-10NC X 5" GR5 YZ
9	8X0120A	BOLT 3/4-10NC X 9" GR8 YZ
10	8X0261	NUT 3/4"-10NC NY-LOCK GR2 YZ
11	8X0265	NUT 3/4"-10NC CNTRLOCK GR2 YZ
12	8X0266	NUT 3/4"-10NC SERFLANG GR2 YZ
13	8X0282	NUT 1"-14TPI TOPLOCK GR B Z
14	8X0306	LOCKWASHER 3/4" YLW ZNC
15	8X0316	WASHER 1" SAE FLAT YZ
16	8X0318	WASHER 3/4"(13/16"ID)FLAT YZ
17	8J1026	CLTR BLADE FLAT .256X26" 5BLT

8K1100

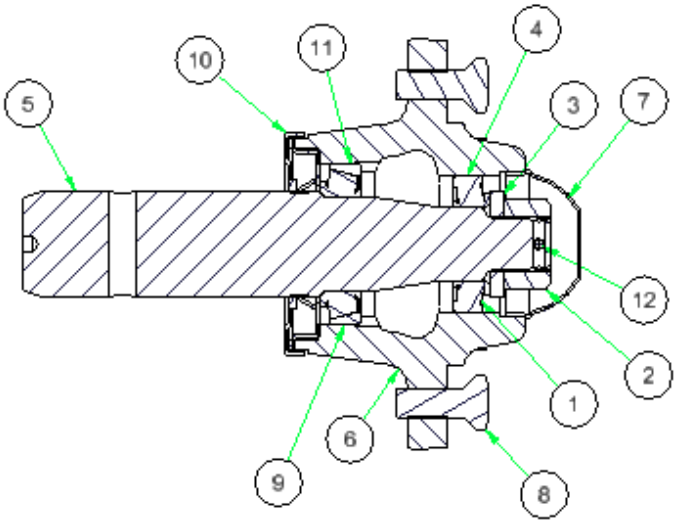

8K1105
8K1105S

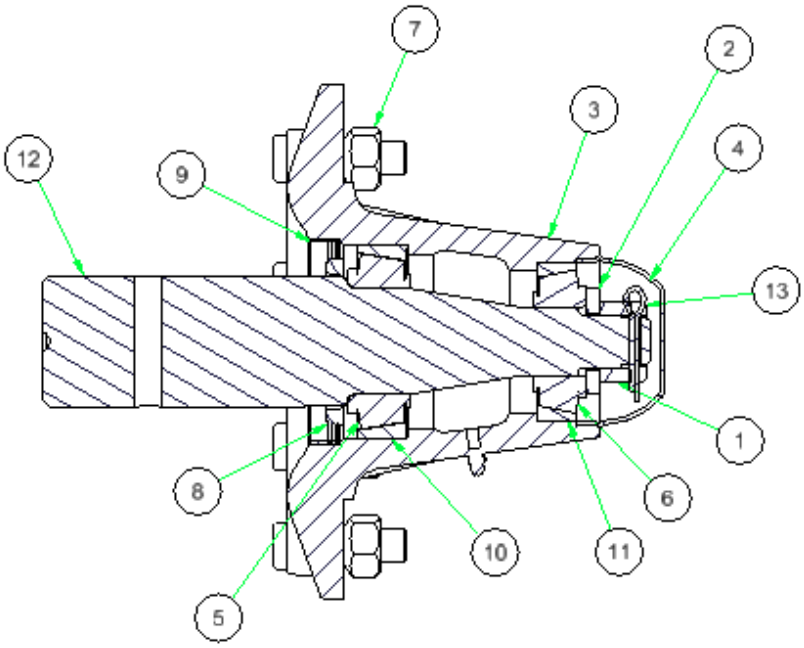

2/12/2021	8K1105.iam/HUB PARTS

8K1100		
ITEM	PN	DESCRIPTION
1	8D5217	BEARING IN 517 OUT 614 & 618
2	8D5312	NUT 1"-14NF HEX SLOT GR2 PLN
3	8D5319	WASHER 1" AXLE
4	8D5332	RACE H517 & H614
5	8R6901	AXLE H614 STR 2"CR X 10"
6	8R6911	HUB H614 W/CUPS&ZRK 6 BLT GBGI
7	8R6913	HUB CAP H614 & H618
8	8R6914	BOLT WHEEL 9/16"-18 UNF- 1.25"
9	8R6917	BEARING INNER 614
10	8R6922	SEAL ASSY GBGI H614 HUB 00-
11	8R6925	RACE INNER H614
12	8X0415	COTTER PIN 3/16 X 1-1/2"

8K1105/8K1105S		
ITEM	PN	DESCRIPTION
1	8D5312	NUT 1"-14NF HEX SLOT GR2 PLN
2	8D5319	WASHER 1" AXLE
3	8K7111	812 HUB ASSEMBLY
4	8K7113	HUB CAP HD812
5	8K7117	BEARING INNER HD812
6	8K7118	BEARING OUTER HD812
7	8K7123	NUT WHEEL BOLT 5/8-18UNF 97-
8	8K7127	SEAL TRPL LIP EXTRNL HD812 06-
9	8K7128	SEAL SLEEVE HD812 06-
10	8K7130	RACE INNER FOR HD812
11	8K7132	RACE OUTER FOR HD812
12	8K7150	SPINDLE HD812 X 11.5" (2.5"DIA.)
	8K7150S	SPINDLE HD812 X 11.5 (2 DIA.)
13	8X0415	COTTER PIN 3/16 X 1-1/2"

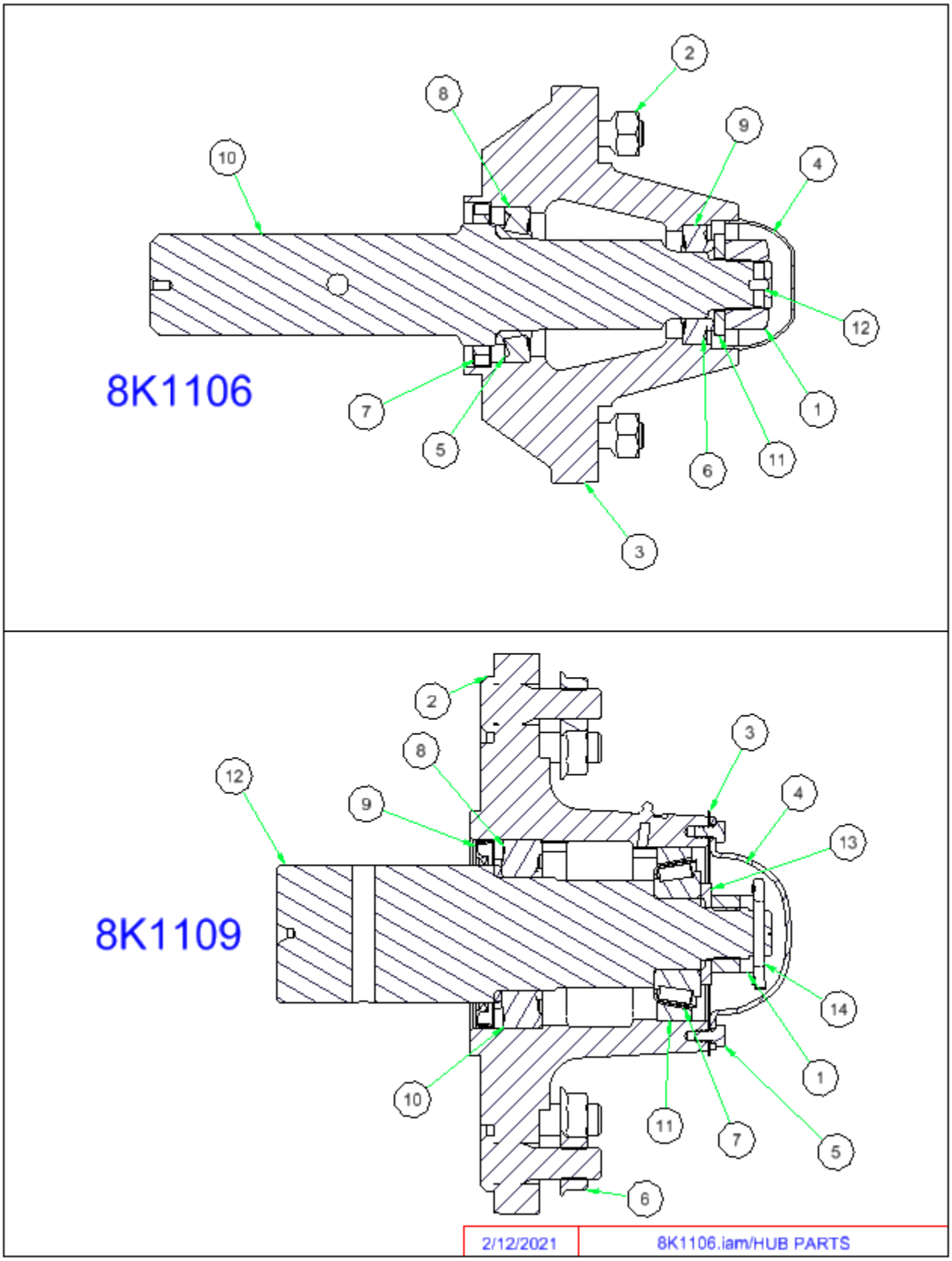
8K1106
1
2
3
4
5
6
7
8
9
10
11
12
8K1109
1
2
3
4
5
6
7
8
9
10
11
12
13
14
2/12/2021
8K1106.iam/HUB PARTS

8K1106		
ITEM	PN	DESCRIPTION
1	8D5314	NUT 1-1/4"-12 HEX SLOT GR2 PLN
2	8K7123	NUT WHEEL BOLT 5/8-18UNF 97-
3	8K7340	HUB HD817 W/CUPS&SRK 8BLT3LIP
4	8K7341	HUB CAP HD817
5	8K7342	BEARING INNER HD817
6	8K7343	BEARING OUTER HD817
7	8K7344	SEAL 3"ID HD817 SE42
8	8K7346	RACE INNER HD817
9	8K7347	RACE GBGI & OUTR 817
10	8K7349	AXLE HD817X 15.25" (2.5"DIA.RCVR)
11	8X0328	WASHER 1.312"IDX2.5 OD-1/4" BL
12	8X0414	COTTER PIN 1/4 X 2" YZ

8K1109		
ITEM	PN	DESCRIPTION
1	8D5314	NUT 1-1/4"-12 HEX SLOT GR2 PLN
2	8K7210	HUB H1010 W/CUPS&ZRK 10BLT 15K
3	8K7212	GASKET HUB CAP H1010
4	8K7213	HUB CAP H1010
5	8K7214	BOLT HUB CAP H1010
6	8K7216	NUT 3/4"-16UNF FLANGE
7	8K7218	BEARING OUTER 12&15K H1010
8	8K7219	BEARING INNER 15K H1010
9	8K7221	SEAL 3.3"ID 15K H1010
10	8K7231	RACE INNER 15K H1010
11	8K7232	RACE OUTER 12K&15K H1010
12	8K7251	3.375' SPINDLE FOR 15K HUB
13	8X0328	WASHER 1.312"IDX2.5 OD-1/4" BL
14	8X0414	COTTER PIN 1/4 X 2" YZ

INSTALLATION AND OPERATION INSTRUCTIONS FOR 8B9520 ACRE METER KIT

Attach Hub Odometer to mount as shown, using 1/2" Lock Washer.
Replace Dust Cap Protector with Acre Meter Mount. Recommended location for Acre Meter is the LEFT FRONT blade hub. DO NOT locate Acre Meter beneath wing hinge, or at widest point of machine. Acre Meter will be damaged if installed in these locations.
The Hub Odometer is calibrated at 359 revolutions per acre.
Refer to the chart below for conversion on your implement.

CONVERSION FACTORS	
IMPLEMENT WIDTH	ACRES COVER EQUALS METER READING MULTIPLIED BY
25'	1.14
30'	1.37
35'	1.60
40'	1.90

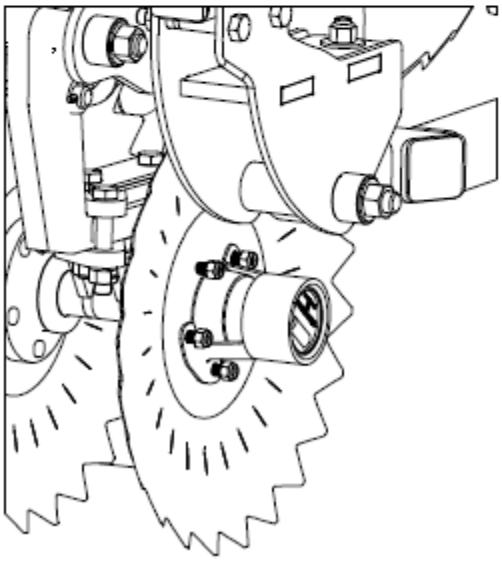

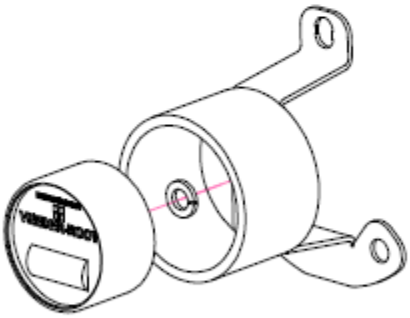

6/12/2019	8B9520.iam/ACREMETER PKG VRT RENEGADE

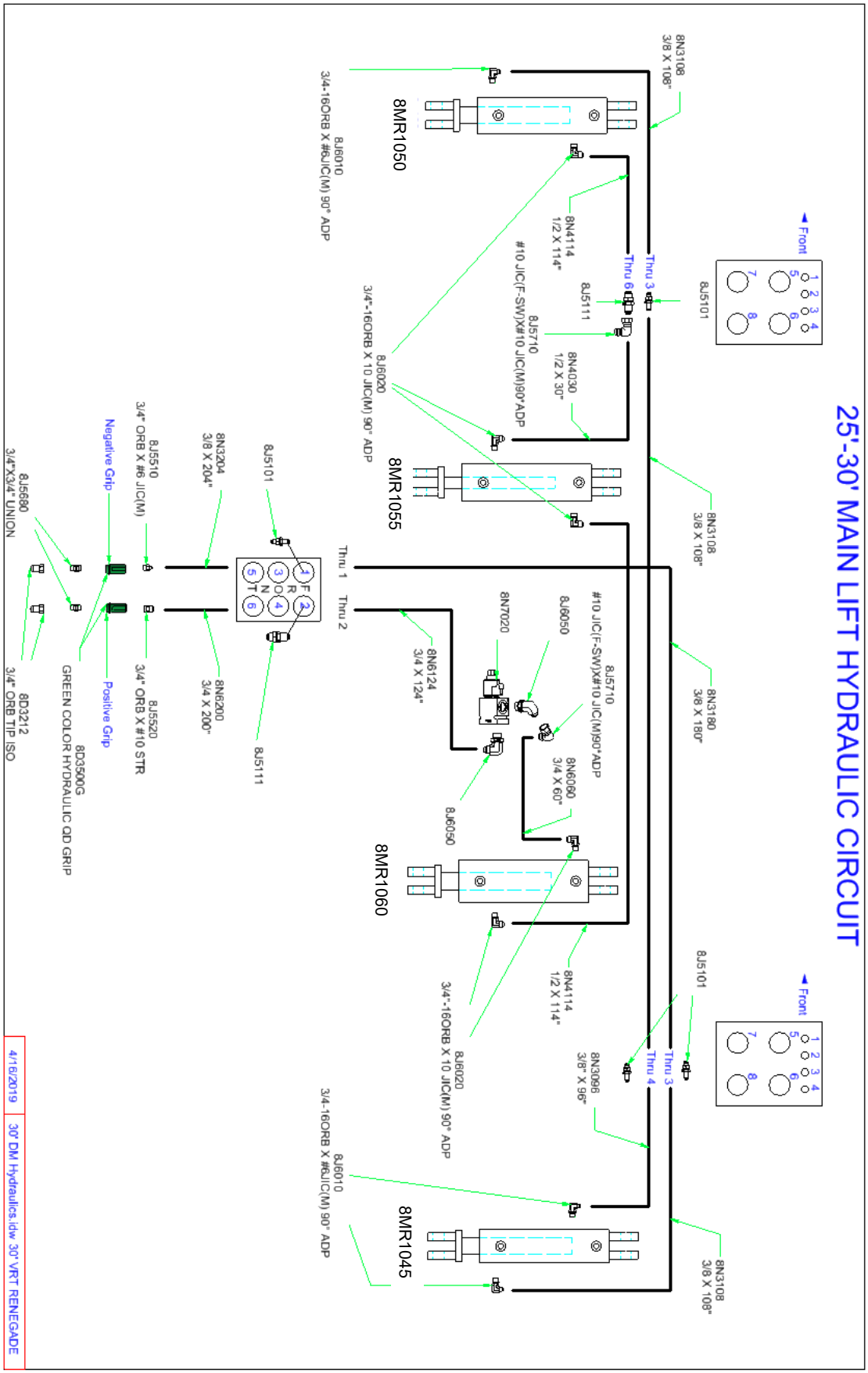
25'-30' MAIN LIFT HYDRAULIC CIRCUIT
8MR1050
8MR1055
8MR1060
8MR1045
8N3108
3/8 X 108"
8J6010
3/4-16ORB X #6JIC(M) 90° ADP
8N4114
1/2 X 114"
8J5111
8J5710
#10 JIC(F-SW)X#10 JIC(M)90°ADP
8N4030
1/2 X 30"
8J6020
3/4"-16ORB X 10 JIC(M) 90° ADP
8J5101
Front
Thru 1
Thru 2
Thru 3
Thru 4
Thru 6
8N3204
3/8 X 204"
8J5510
3/4" ORB X #6 JIC(M)
8N6200
3/4 X 200"
8J5520
3/4" ORB X #10 STR
8J5111
8N6124
3/4 X 124"
8N7020
8J6050
8N6060
3/4 X 60"
8N3180
3/8 X 180"
8N3096
3/8" X 96"
8J5680
3/4"X3/4" UNION
8D3212
3/4" ORB TIP ISO
8D3500G
GREEN COLOR HYDRAULIC QD GRIP
Negative Grip
Positive Grip
4/16/2019
30' DM Hydraulics.idw 30' VRT RENEGADE

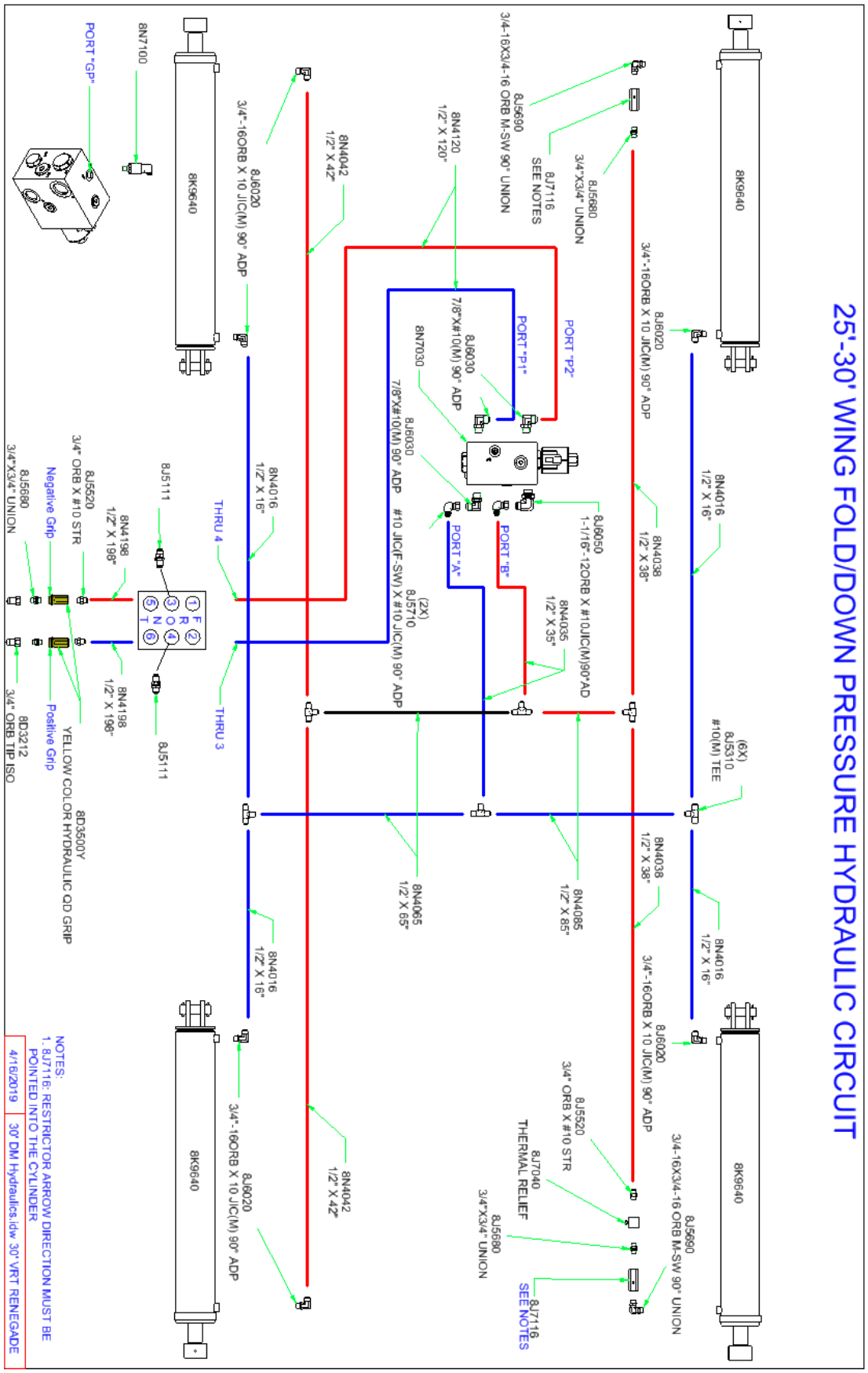
25'-30' WING FOLD/DOWN PRESSURE HYDRAULIC CIRCUIT
8K9640
8J5690
3/4-16X3/4-16 ORB M-SW 90° UNION
8J5520
3/4" ORB X #10 STR
8J7040
THERMAL RELIEF
8J5680
3/4"X3/4" UNION
8J7116
SEE NOTES
8J6020
3/4"-16ORB X 10 JIC(M) 90° ADP
8N4016
1/2" X 16"
8N4038
1/2" X 38"
(6X)
8J5310
#10(M) TEE
8N4042
1/2" X 42"
8N4085
1/2" X 85"
8N4065
1/2" X 65"
8J6050
1-1/16"-12ORB X #10JIC(M)90°AD
8N4035
1/2" X 35"
(2X)
8J5710
7/8"X#10(M) 90° ADP #10 JIC(F-SW) X #10 JIC(M) 90° ADP
8J6030
7/8"X#10(M) 90° ADP
8N7030
8N4120
1/2" X 120"
PORT "P1"
PORT "P2"
PORT "A"
PORT "B"
THRU 4
THRU 3
8J5111
8N4198
1/2" X 198"
8J5520
3/4" ORB X #10 STR
Negative Grip
Positive Grip
YELLOW COLOR HYDRAULIC QD GRIP
8D3500Y
8D3212
3/4" ORB TIP ISO
8N7100
PORT "GP"
NOTES:
1. 8J7116: RESTRICTOR ARROW DIRECTION MUST BE POINTED INTO THE CYLINDER
4/16/2019
30' DM Hydraulics.idw 30' VRT RENEGADE

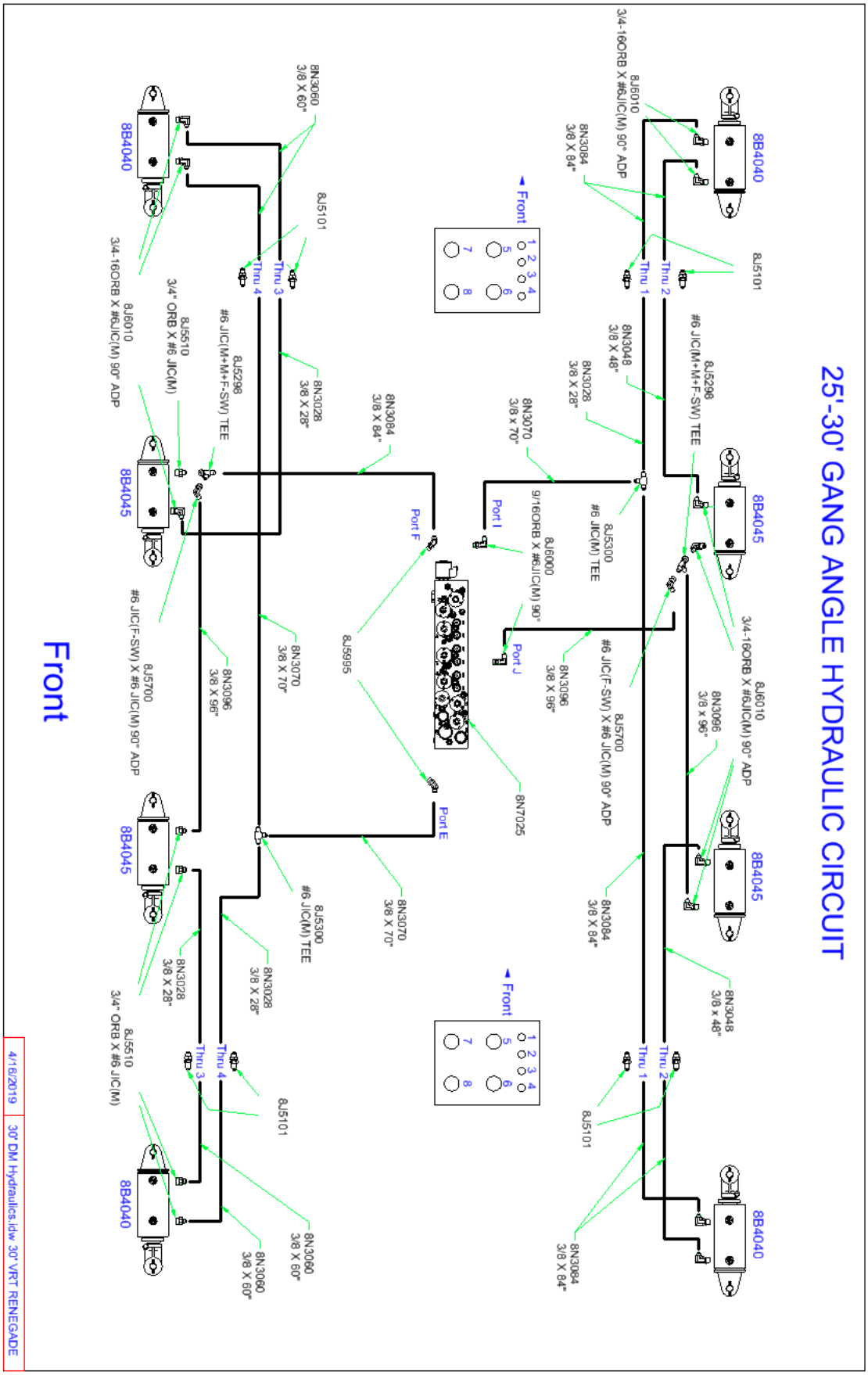
25'-30' GANG ANGLE HYDRAULIC CIRCUIT
8B4040
8J5101
Thru 2
Thru 1
8J6010
3/4-16ORB X #6JIC(M) 90° ADP
8N3084
3/8 X 84"
8N3048
3/8 X 48"
8N3028
3/8 X 28"
8J5298
#6 JIC(M+M+F-SW) TEE
8B4045
3/4-16ORB X #6JIC(M) 90° ADP
8N3096
3/8 X 96"
8J5700
#6 JIC(F-SW) X #6 JIC(M) 90° ADP
8J5300
#6 JIC(M) TEE
8N3070
3/8 X 70"
8J6000
9/16ORB X #6JIC(M) 90°
Port I
Port J
Front
1 2 3 4
5 6
7 8
8N7025
Port E
Port F
8J5995
8N3060
3/8 X 60"
Thru 3
Thru 4
8J5510
3/4" ORB X #6 JIC(M)
#6 JIC(F-SW) X #6 JIC(M) 90° ADP
Front

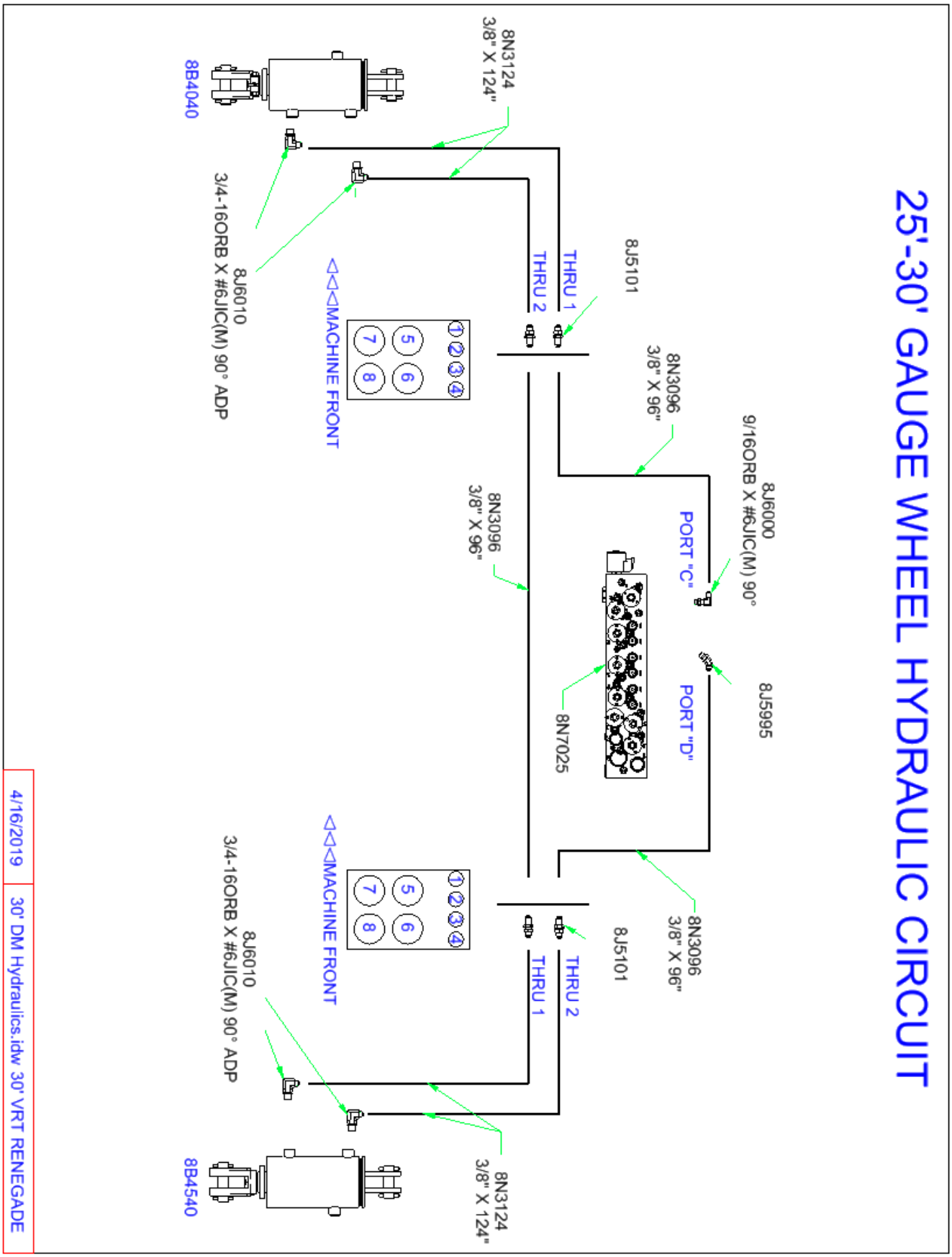
25'-30' GAUGE WHEEL HYDRAULIC CIRCUIT
8J6000
9/16ORB X #6JIC(M) 90°
8J5995
PORT "C"
PORT "D"
8N3096
3/8" X 96"
8J5101
8N7025
THRU 1
THRU 2
8N3124
3/8" X 124"
8B4040
8J6010
3/4-16ORB X #6JIC(M) 90° ADP
MACHINE FRONT
1 2 3 4
5 6
7 8
8B4540
4/16/2019
30' DM Hydraulics.idw 30' VRT RENEGADE

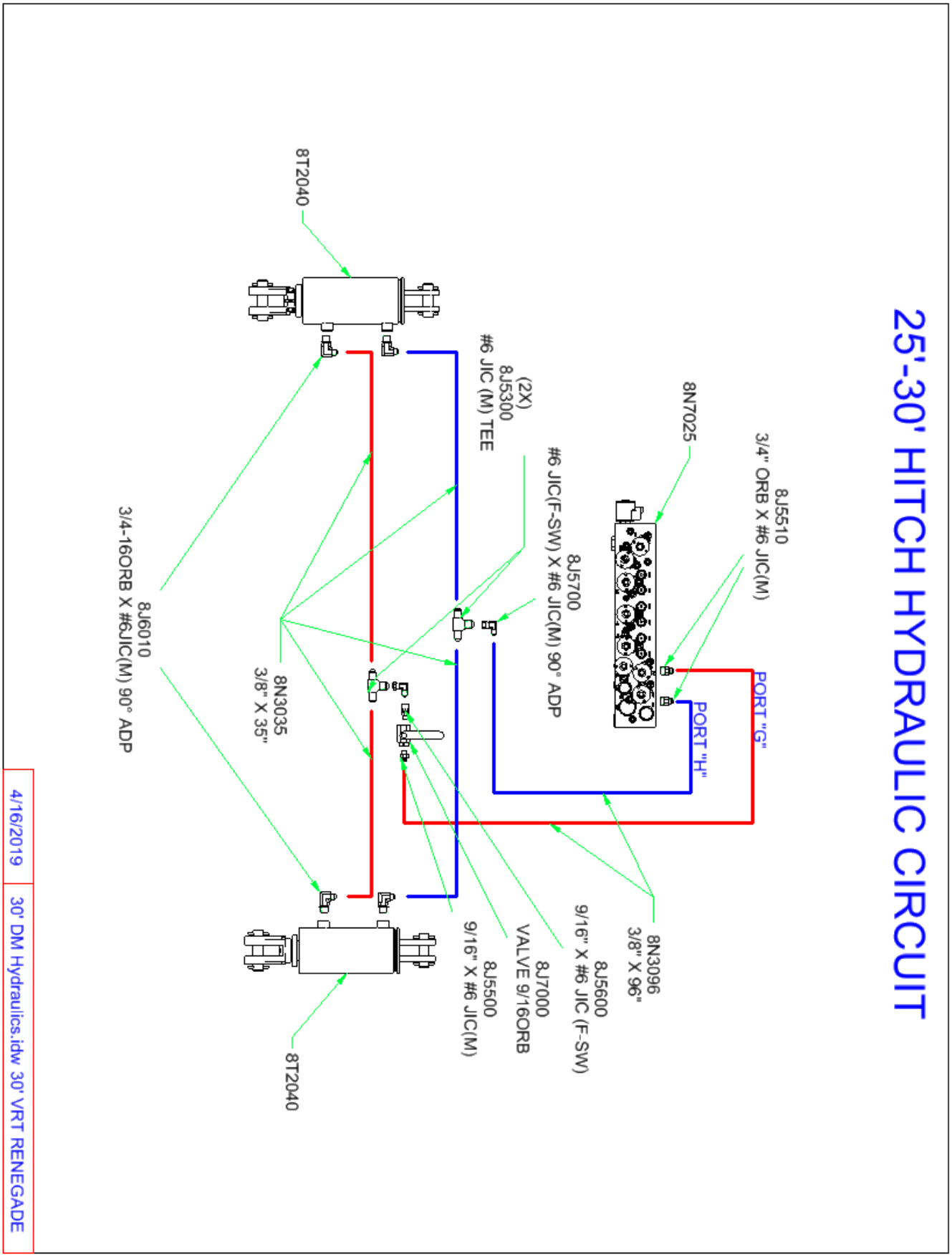
25'-30' HITCH HYDRAULIC CIRCUIT
8J5510
3/4" ORB X #6 JIC(M)
PORT "G"
PORT "H"
8N7025
8N3096
3/8" X 96"
8J5600
9/16" X #6 JIC (F-SW)
8J7000
VALVE 9/16ORB
8J5500
9/16" X #6 JIC(M)
8T2040
8J5700
#6 JIC(F-SW) X #6 JIC(M) 90° ADP
(2X)
8J5300
#6 JIC (M) TEE
8T2040
8N3035
3/8" X 35"
8J6010
3/4-16ORB X #6JIC(M) 90° ADP
4/16/2019
30' DM Hydraulics.idw 30' VRT RENEGADE

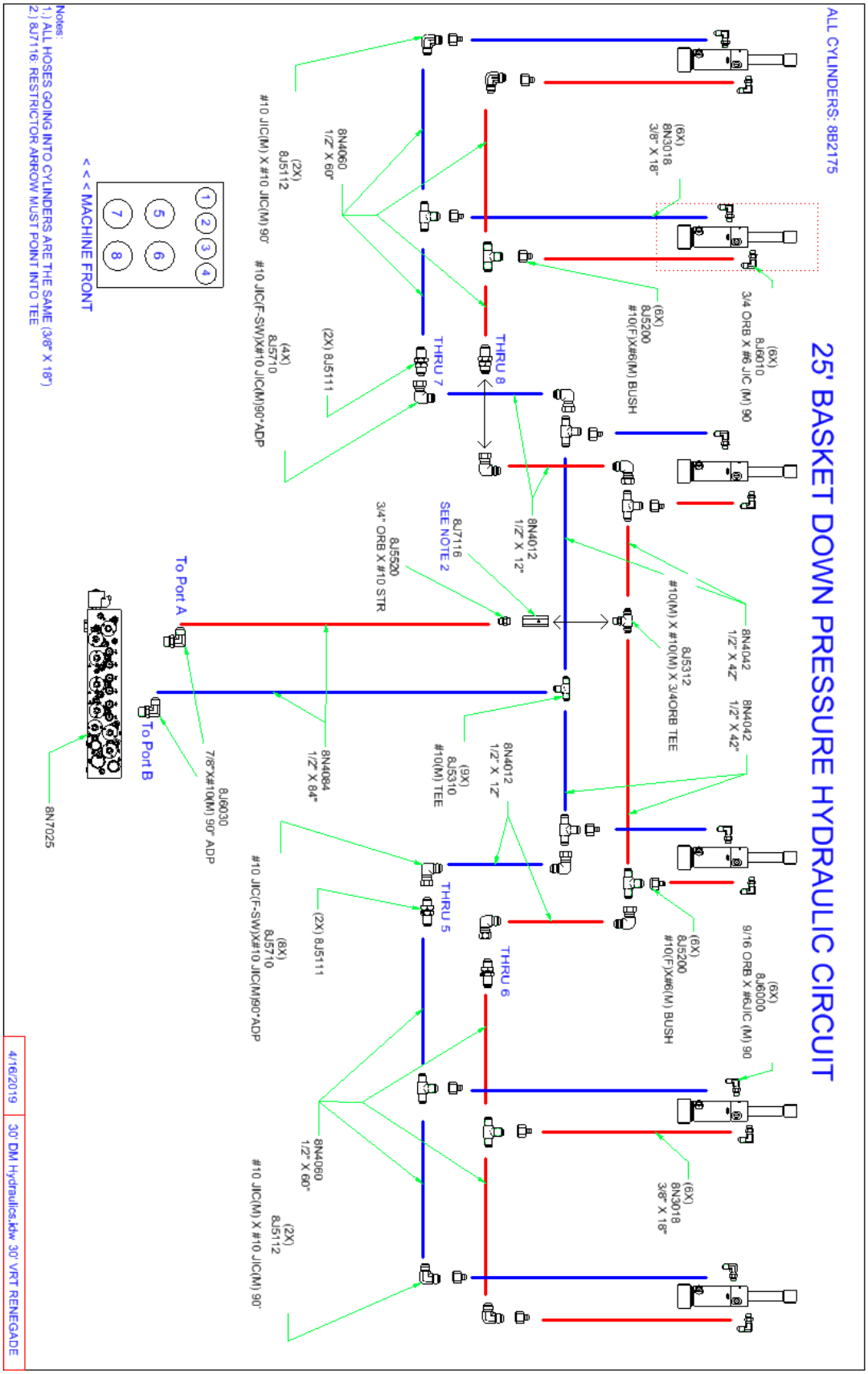
ALL CYLINDERS: 8B2175
25' BASKET DOWN PRESSURE HYDRAULIC CIRCUIT
(6X) 8J6010 3/4 ORB X #6 JIC (M) 90
(6X) 8N3018 3/8" X 18"
(6X) 8J5200 #10(F)X#6(M) BUSH
THRU 8
THRU 7
(2X) 8J5111
8N4060 1/2" X 60"
(2X) 8J5112 #10 JIC(M) X #10 JIC(M) 90°
(4X) 8J5710 #10 JIC(F-SW)X#10 JIC(M)90°ADP
8N4012 1/2" X 12"
8J7116 SEE NOTE 2
8J5520 3/4" ORB X #10 STR
8N4042 1/2" X 42"
8N4042 1/2" X 42"
8J5312 #10(M) X #10(M) X 3/4ORB TEE
(6X) 8J5200 #10(F)X#6(M) BUSH
(6X) 8J6000 9/16 ORB X #6JIC (M) 90
THRU 6
THRU 5
8N4012 1/2" X 12"
(9X) 8J5310 #10(M) TEE
8N4064 1/2" X 84"
(2X) 8J5111
(8X) 8J5710 #10 JIC(F-SW)X#10 JIC(M)90°ADP
8N4060 1/2" X 60"
(6X) 8N3018 3/8" X 18"
(2X) 8J5112 #10 JIC(M) X #10 JIC(M) 90°
To Port A
To Port B
7/8"X#10(M) 90° ADP
8J6030
8N7025
< < < MACHINE FRONT
1 2 3 4
5 6
7 8
Notes:
1.) ALL HOSES GOING INTO CYLINDERS ARE THE SAME (3/8" X 18")
2.) 8J7116 RESTRICTOR ARROW MUST POINT INTO TEE
4/16/2019
30' DM Hydraulics.kitw 30' VRT RENEGADE

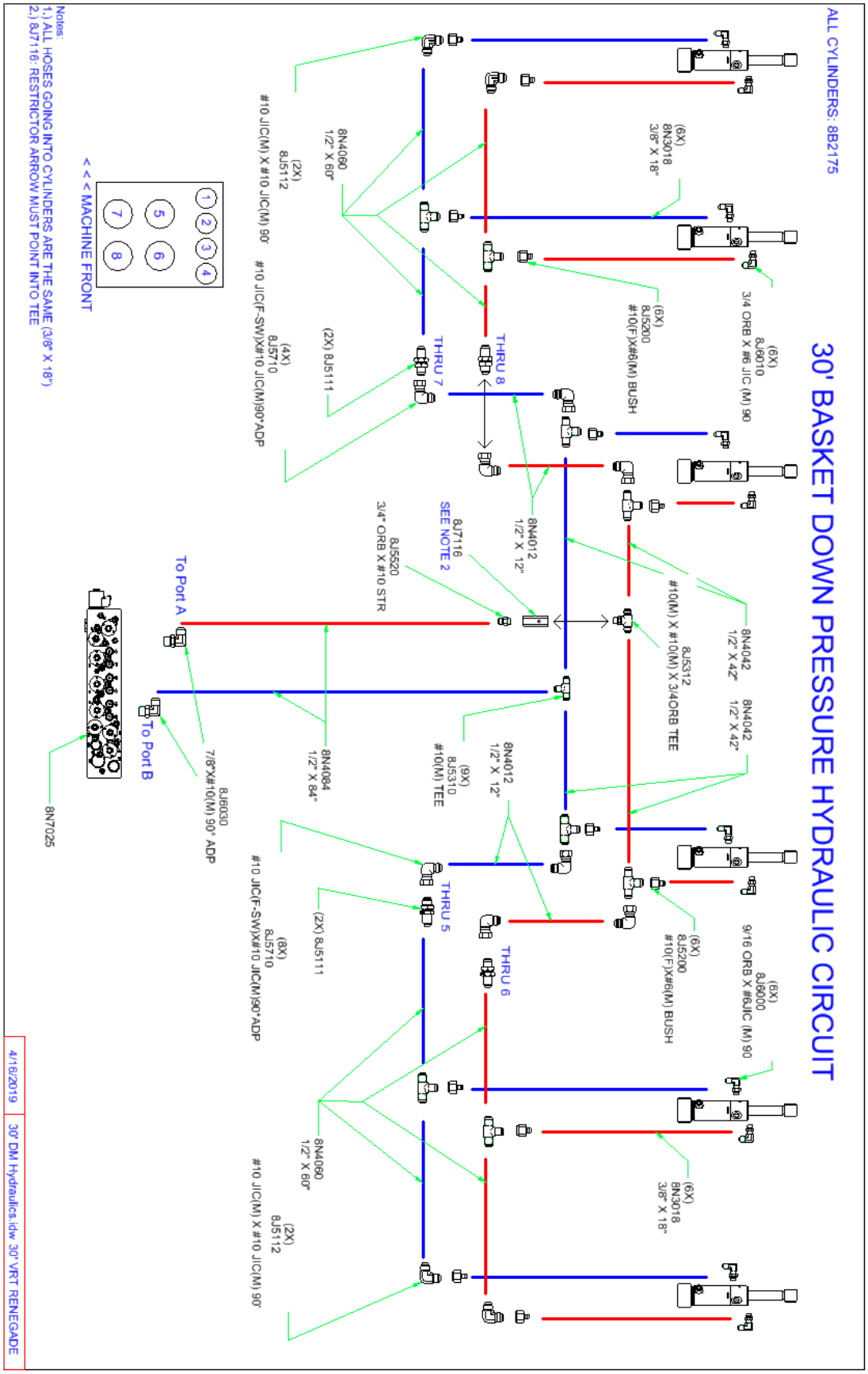
30' BASKET DOWN PRESSURE HYDRAULIC CIRCUIT
ALL CYLINDERS: 8B2175
(6X) 8J6010 3/4 ORB X #6 JIC (M) 90
(6X) 8N3018 3/8" X 18"
(6X) 8J5200 #10(F)X#6(M) BUSH
(6X) 8J6000 9/16 ORB X #6JIC (M) 90
(6X) 8J5200 #10(F)X#6(M) BUSH
(6X) 8N3018 3/8" X 18"
8N4042 1/2" X 42"
8N4042 1/2" X 42"
8J5312 #10(M) X #10(M) X 3/4ORB TEE
8N4012 1/2" X 12"
8N4012 1/2" X 12"
(9X) 8J5310 #10(M) TEE
8J7116 SEE NOTE 2
8J5520 3/4" ORB X #10 STR
8N4084 1/2" X 84"
8N4060 1/2" X 60"
8N4060 1/2" X 60"
(2X) 8J5112 #10 JIC(M) X #10 JIC(M) 90°
(2X) 8J5111
(6X) 8J5710 #10 JIC(F-SW)X#10 JIC(M)90°ADP
(2X) 8J5111
(2X) 8J5112 #10 JIC(M) X #10 JIC(M) 90°
(4X) 8J5710 #10 JIC(F-SW)X#10 JIC(M)90°ADP
7/8"X#10(M) 90° ADP 8J6030
THRU 5
THRU 6
THRU 7
THRU 8
To Port A
To Port B
8N7025
< < < MACHINE FRONT
1 2 3 4 5 6 7 8
Notes:
1.) ALL HOSES GOING INTO CYLINDERS ARE THE SAME (3/8" X 18")
2.) 8J7116: RESTRICTOR ARROW MUST POINT INTO TEE
4/16/2019
30' DM Hydraulics.idw 30' VRT RENEGADE

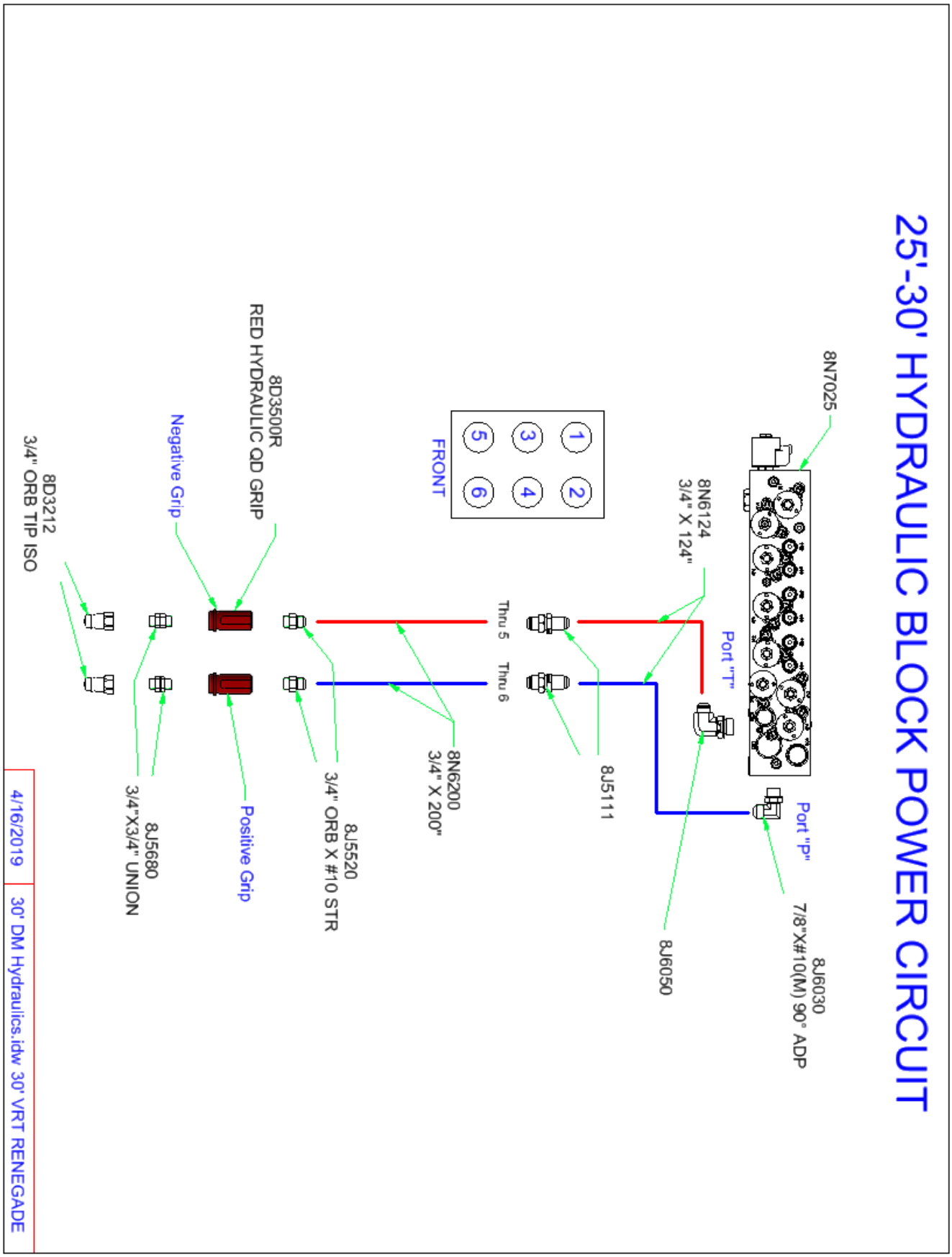
25'-30' HYDRAULIC BLOCK POWER CIRCUIT
8N7025
Port "P"
8J6030
7/8"X#10(M) 90° ADP
Port "T"
8N6124
3/4" X 124"
8J6050
8J5111
1
2
3
4
5
6
FRONT
Thru 5
Thru 6
8N6200
3/4" X 200"
8J5520
3/4" ORB X #10 STR
8D3500R
RED HYDRAULIC QD GRIP
Negative Grip
Positive Grip
8J5680
3/4"X3/4" UNION
8D3212
3/4" ORB TIP ISO
4/16/2019
30' DM Hydraulics.idw 30' VRT RENEGADE

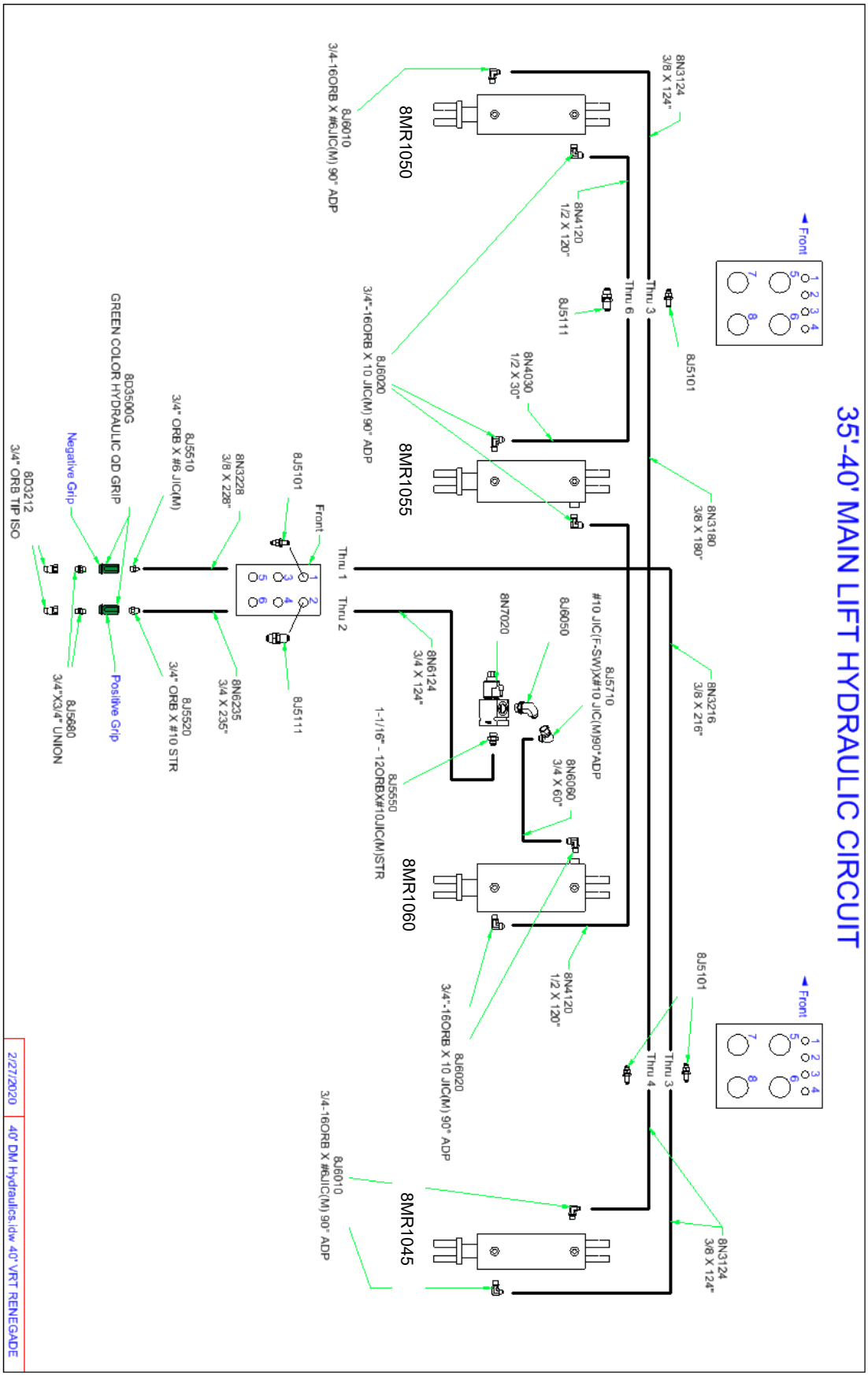
35'-40' MAIN LIFT HYDRAULIC CIRCUIT
Front
8N3124
3/8 X 124"
8J5101
Thru 3
8N3180
3/8 X 180"
8N4120
1/2 X 120"
Thru 6
8J5111
8N4030
1/2 X 30"
8MR1050
8MR1055
8J6010
3/4-16ORB X #6JIC(M) 90° ADP
8J6020
3/4"-16ORB X 10 JIC(M) 90° ADP
8N3216
3/8 X 216"
8J5710
#10 JIC(F-SW)X#10 JIC(M)90°ADP
8J6050
8N7020
8N6060
3/4 X 60"
8N6124
3/4 X 124"
8J5550
1-1/16" - 12ORBX#10JIC(M)STR
8MR1060
8N4120
1/2 X 120"
8J6020
3/4"-16ORB X 10 JIC(M) 90° ADP
8J6010
3/4-16ORB X #6JIC(M) 90° ADP
8MR1045
8N3124
3/8 X 124"
8J5101
Thru 4
Thru 3
Front
8J5101
8N3228
3/8 X 228"
8J5510
3/4" ORB X #6 JIC(M)
8D3500G
GREEN COLOR HYDRAULIC QD GRIP
Negative Grip
8D3212
3/4" ORB TIP ISO
Thru 1
Thru 2
8J5111
8N6235
3/4 X 235"
8J5520
3/4" ORB X #10 STR
Positive Grip
8J5680
3/4"X3/4" UNION
2/27/2020
40' DM Hydraulics.idw 40' VRT RENEGADE

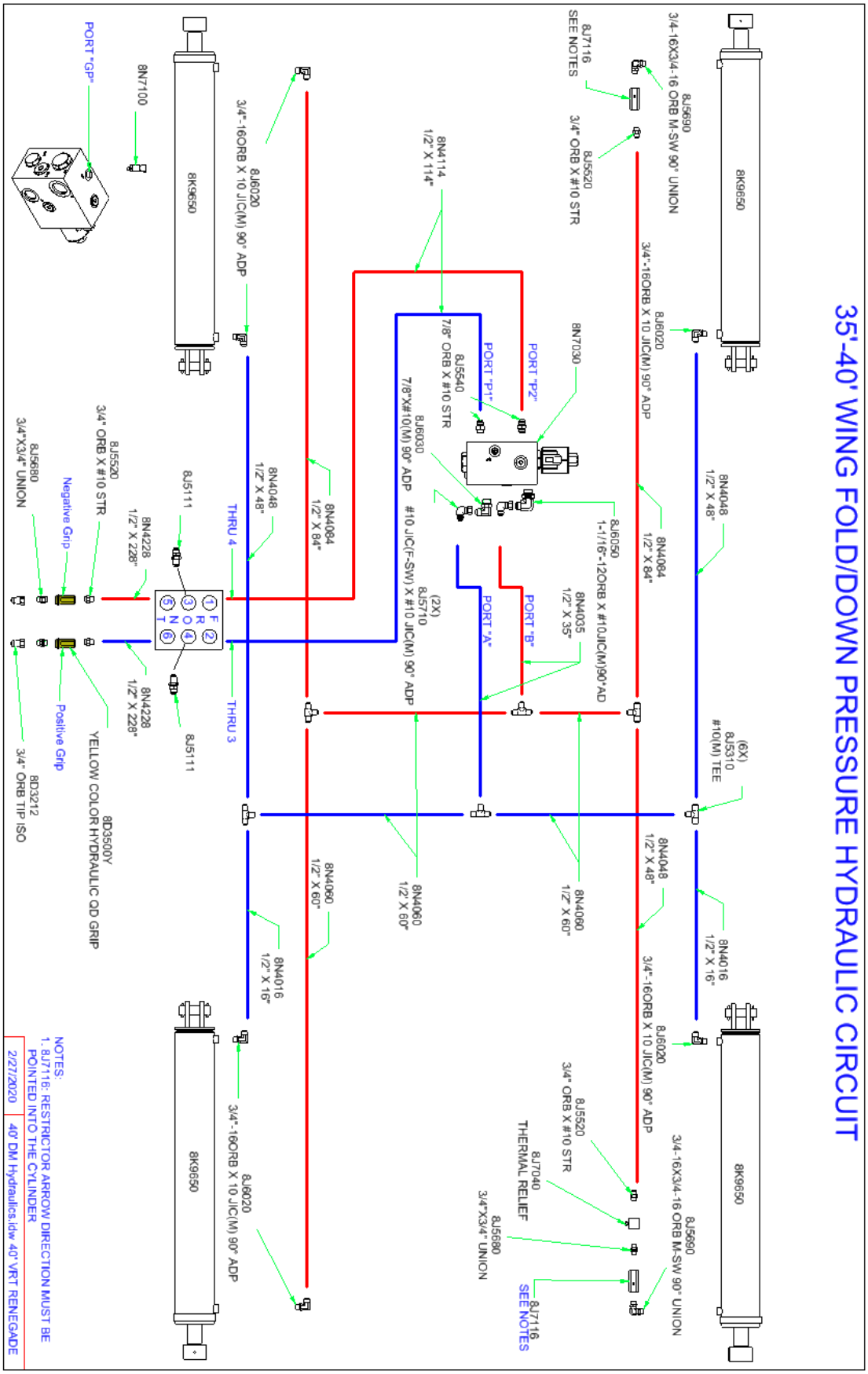
35'-40' WING FOLD/DOWN PRESSURE HYDRAULIC CIRCUIT
8K9650
8K9650
8K9650
8K9650
8J7116
SEE NOTES
8J5690
3/4-16X3/4-16 ORB M-SW 90° UNION
8J5520
3/4" ORB X #10 STR
8J6020
3/4"-16ORB X 10 JIC(M) 90° ADP
8N4114
1/2" X 114"
8N7030
PORT "P2"
PORT "P1"
8J5540
7/8" ORB X #10 STR
8J6030
7/8"X#10(M) 90° ADP
8J6050
1-1/16"-12ORB X #10JIC(M)90°AD
8N4084
1/2" X 84"
8N4048
1/2" X 48"
8N4035
1/2" X 35"
PORT "B"
PORT "A"
(2X)
8J5710
#10 JIC(F-SW) X #10 JIC(M) 90° ADP
(6X)
8J5310
#10(M) TEE
8N4016
1/2" X 16"
8N4060
1/2" X 60"
8J5520
3/4" ORB X #10 STR
8J7040
THERMAL RELIEF
8J5680
3/4"X3/4" UNION
8J7116
SEE NOTES
8J5690
3/4-16X3/4-16 ORB M-SW 90° UNION
8N7100
PORT "GP"
8J6020
3/4"-16ORB X 10 JIC(M) 90° ADP
8N4084
1/2" X 84"
8N4048
1/2" X 48"
THRU 4
THRU 3
8J5111
8J5111
8J5520
3/4" ORB X #10 STR
8J5680
3/4"X3/4" UNION
8N4228
1/2" X 228"
8N4228
1/2" X 228"
Negative Grip
Positive Grip
8D3212
3/4" ORB TIP ISO
8D3500Y
YELLOW COLOR HYDRAULIC QD GRIP
8N4060
1/2" X 60"
8N4016
1/2" X 16"
8J6020
3/4"-16ORB X 10 JIC(M) 90° ADP
NOTES:
1. 8J7116: RESTRICTOR ARROW DIRECTION MUST BE POINTED INTO THE CYLINDER
2/27/2020
40' DM Hydraulics.idw 40' VRT RENEGADE

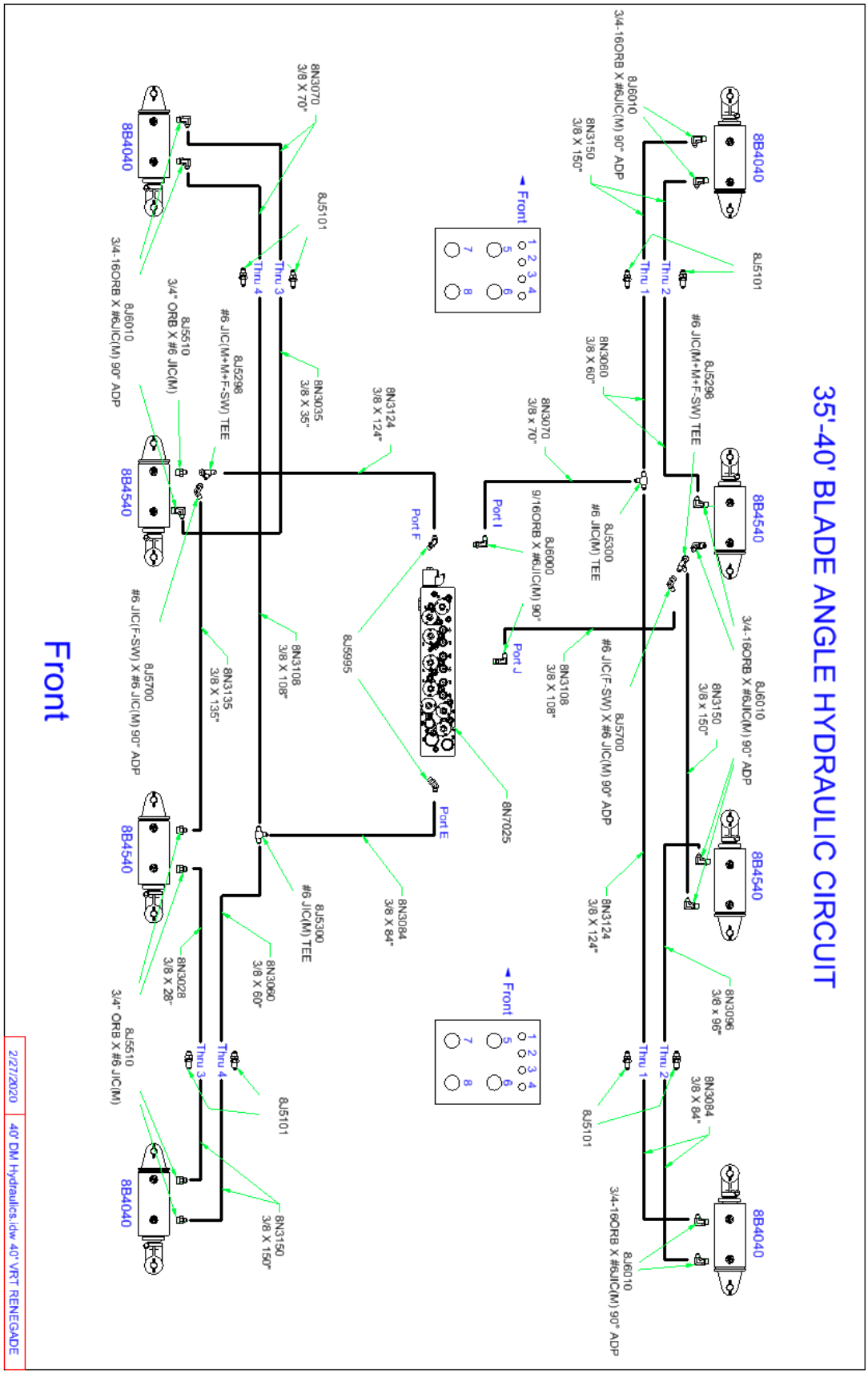

2/27/2020 | 40' DM Hydraulics.idw 40' VRT RENEGADE

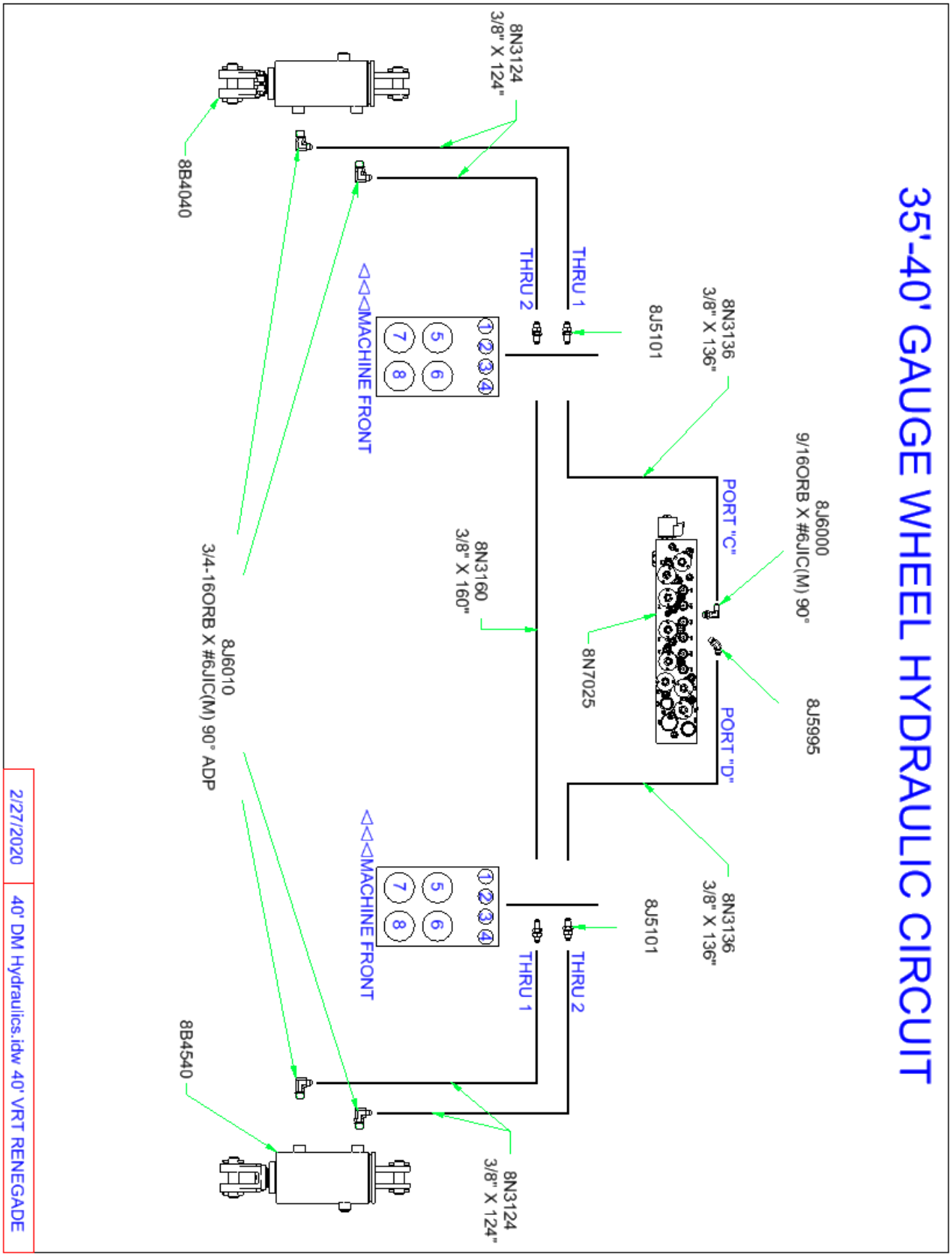
35'-40' GAUGE WHEEL HYDRAULIC CIRCUIT
8J6000
9/16ORB X #6JIC(M) 90°
8J5995
PORT "C"
PORT "D"
8N3136
3/8" X 136"
8J5101
8N7025
8N3136
3/8" X 136"
8J5101
THRU 1
THRU 2
THRU 1
THRU 2
8N3124
3/8" X 124"
8N3124
3/8" X 124"
8N3160
3/8" X 160"
8J6010
3/4-16ORB X #6JIC(M) 90° ADP
8B4040
8B4540
MACHINE FRONT
MACHINE FRONT
1 2 3 4
5 6
7 8
1 2 3 4
5 6
7 8
2/27/2020
40' DM Hydraulics.idw 40' VRT RENEGADE

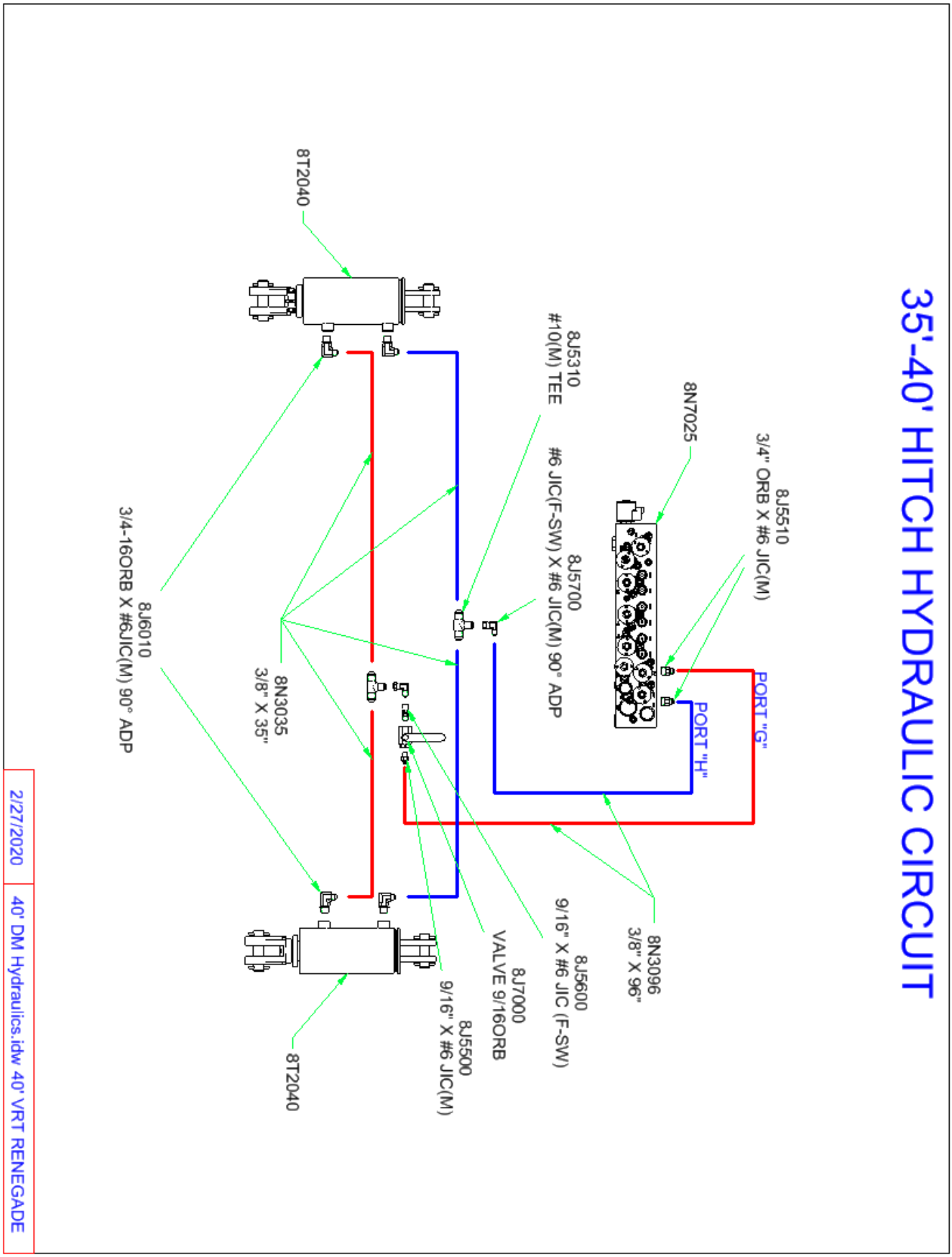
35'-40' HITCH HYDRAULIC CIRCUIT
8J5510
3/4" ORB X #6 JIC(M)
PORT "G"
PORT "H"
8N7025
8N3096
3/8" X 96"
8J5600
9/16" X #6 JIC (F-SW)
8J7000
VALVE 9/16ORB
8J5500
9/16" X #6 JIC(M)
8T2040
8J5310
#10(M) TEE
8J5700
#6 JIC(F-SW) X #6 JIC(M) 90° ADP
8T2040
8N3035
3/8" X 35"
8J6010
3/4-16ORB X #6JIC(M) 90° ADP
2/27/2020
40' DM Hydraulics.idw 40' VRT RENEGADE

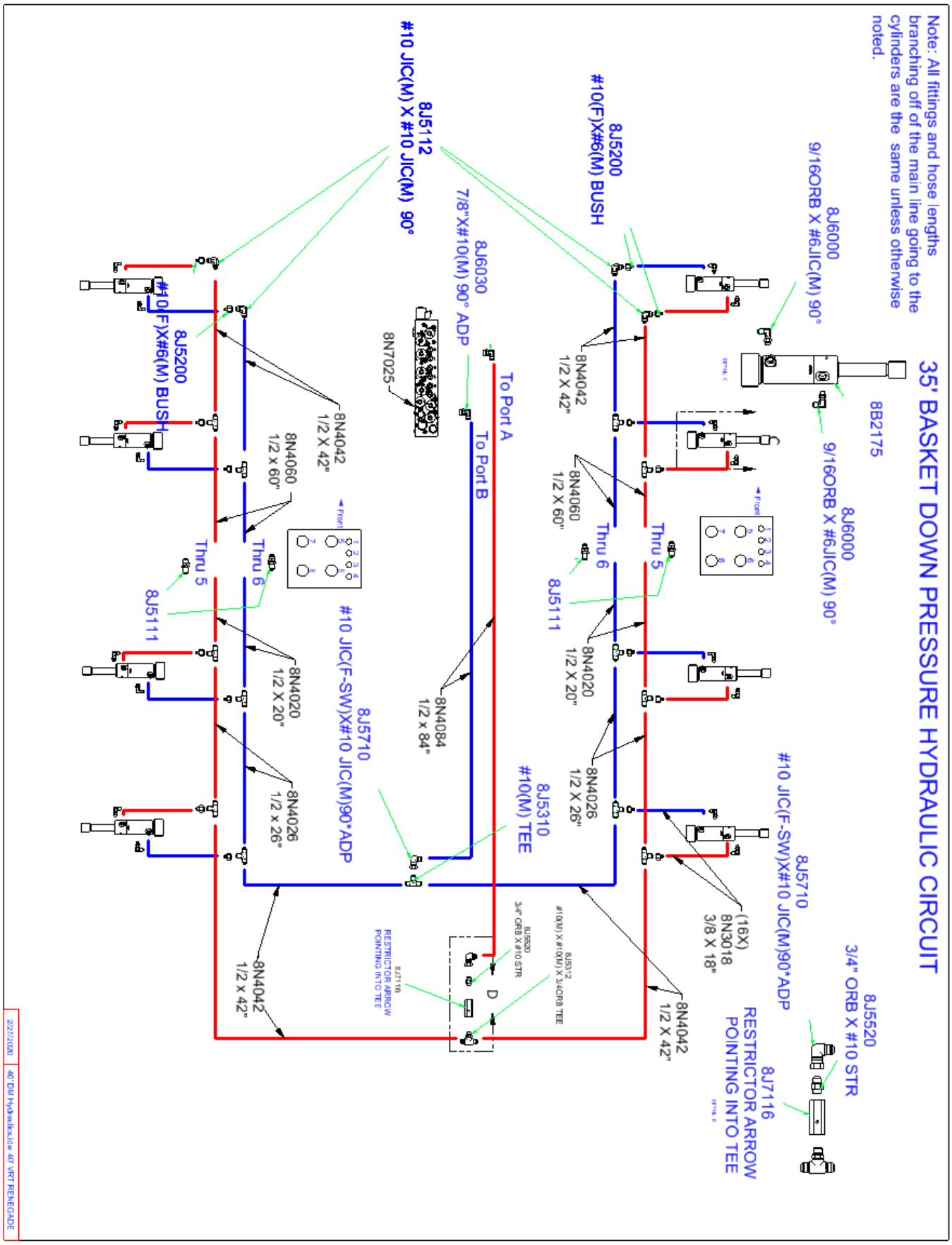
35' BASKET DOWN PRESSURE HYDRAULIC CIRCUIT
Note: All fittings and hose lengths branching off of the main line going to the cylinders are the same unless otherwise noted.
8J6000
9/16ORB X #6JIC(M) 90°
8B2175
8J6000
9/16ORB X #6JIC(M) 90°
8J5520
3/4" ORB X #10 STR
8J5200
#10(F)X#6(M) BUSH
8J5112
#10 JIC(M) X #10 JIC(M) 90°
8J6030
7/8"X#10(M) 90° ADP
8N7025
8N4042
1/2 X 42"
8N4060
1/2 X 60"
Thru 6
Thru 5
8J5111
8N4020
1/2 X 20"
8N4026
1/2 X 26"
8N4042
1/2 X 42"
#10 JIC(F-SW)X#10 JIC(M)90°ADP
8J7116
RESTRICTOR ARROW POINTING INTO TEE
(16X)
8N3018
3/8 X 18"
8J5310
#10(M) TEE
8J5710
#10 JIC(F-SW)X#10 JIC(M)90°ADP
8N4084
1/2 x 84"
To Port A
To Port B
D
8J5520
3/4" ORB X #10 STR
8J5312
#10(M) X #10(M) X 3/4ORB TEE
8J7116
RESTRICTOR ARROW POINTING INTO TEE
8N4042
1/2 X 42"
8N4060
1/2 x 60"
8N4020
1/2 X 20"
8N4026
1/2 x 26"
8N4042
1/2 X 42"
8J5200
#10(F)X#6(M) BUSH
Thru 5
Thru 6
8J5111
8J5710
#10 JIC(F-SW)X#10 JIC(M)90°ADP
Front
2/27/2020
40' DM Hydraulics (dw 40' VRT RENEGADE

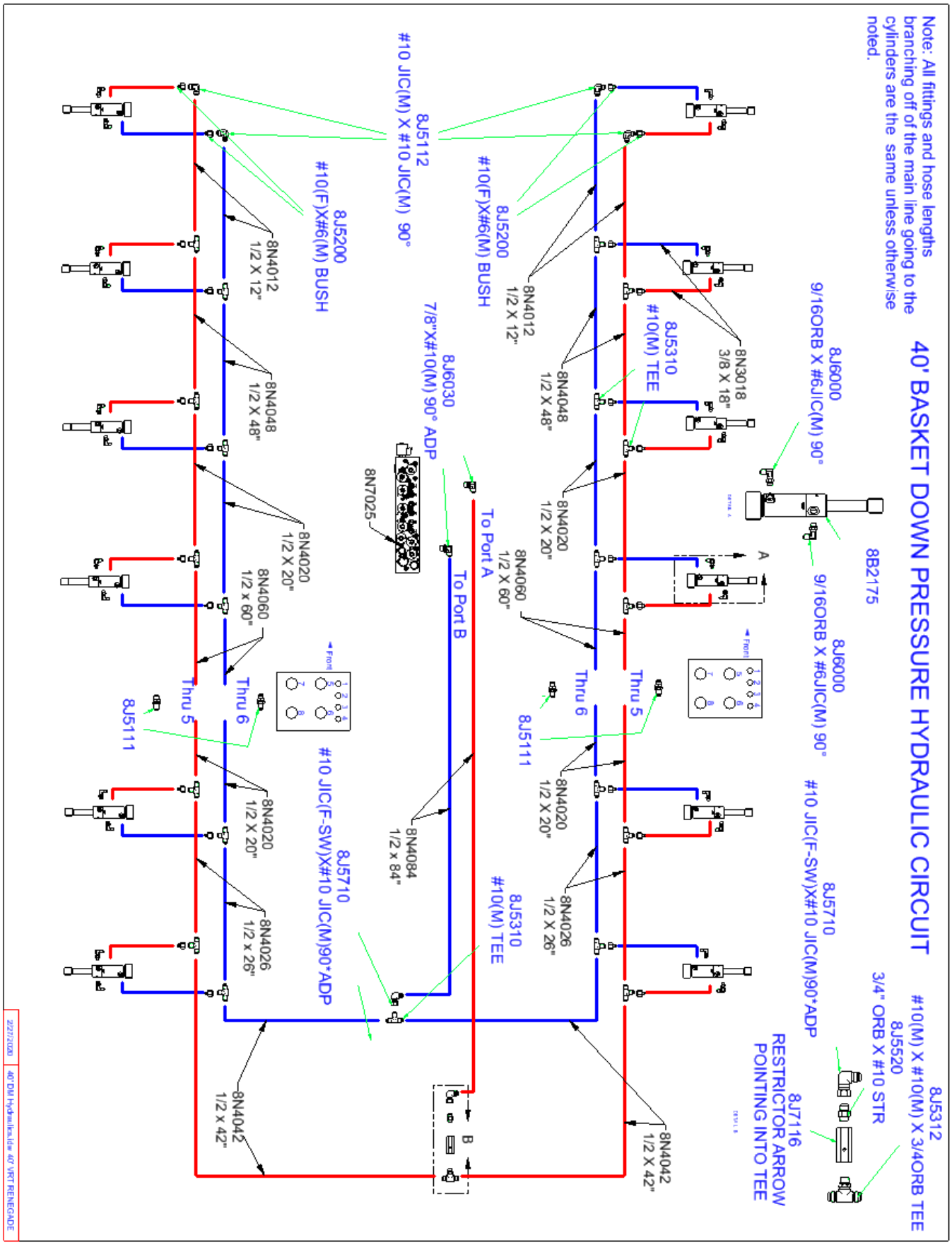
40' BASKET DOWN PRESSURE HYDRAULIC CIRCUIT
Note: All fittings and hose lengths branching off of the main line going to the cylinders are the same unless otherwise noted.
8J5112
#10 JIC(M) X #10 JIC(M) 90°
8J5200
#10(F)X#6(M) BUSH
8J5200
#10(F)X#6(M) BUSH
8N4012
1/2 X 12"
8N4012
1/2 X 12"
8N4048
1/2 X 48"
8N4048
1/2 X 48"
8J6030
7/8"X#10(M) 90° ADP
8N7025
8N4020
1/2 X 20"
8N4020
1/2 X 20"
8N4060
1/2 x 60"
8N4060
1/2 X 60"
To Port A
To Port B
Thru 5
Thru 6
8J5111
8J5111
8N4020
1/2 X 20"
8N4020
1/2 X 20"
8N4084
1/2 x 84"
8J5710
#10 JIC(F-SW)X#10 JIC(M)90*ADP
8J5310
#10(M) TEE
8N4026
1/2 x 26"
8N4026
1/2 X 26"
8N4042
1/2 x 42"
8N4042
1/2 X 42"
8J6000
9/16ORB X #6JIC(M) 90°
8J6000
9/16ORB X #6JIC(M) 90°
8B2175
8J5310
#10(M) TEE
8N3018
3/8 X 18"
8J5710
#10 JIC(F-SW)X#10 JIC(M)90*ADP
8J5312
#10(M) X #10(M) X 3/4ORB TEE
8J5520
3/4" ORB X #10 STR
8J7116
RESTRICTOR ARROW
POINTING INTO TEE
A
B
Front
2/27/2020
40' DM Hydraulics.idw 40' VRT RENEGADE

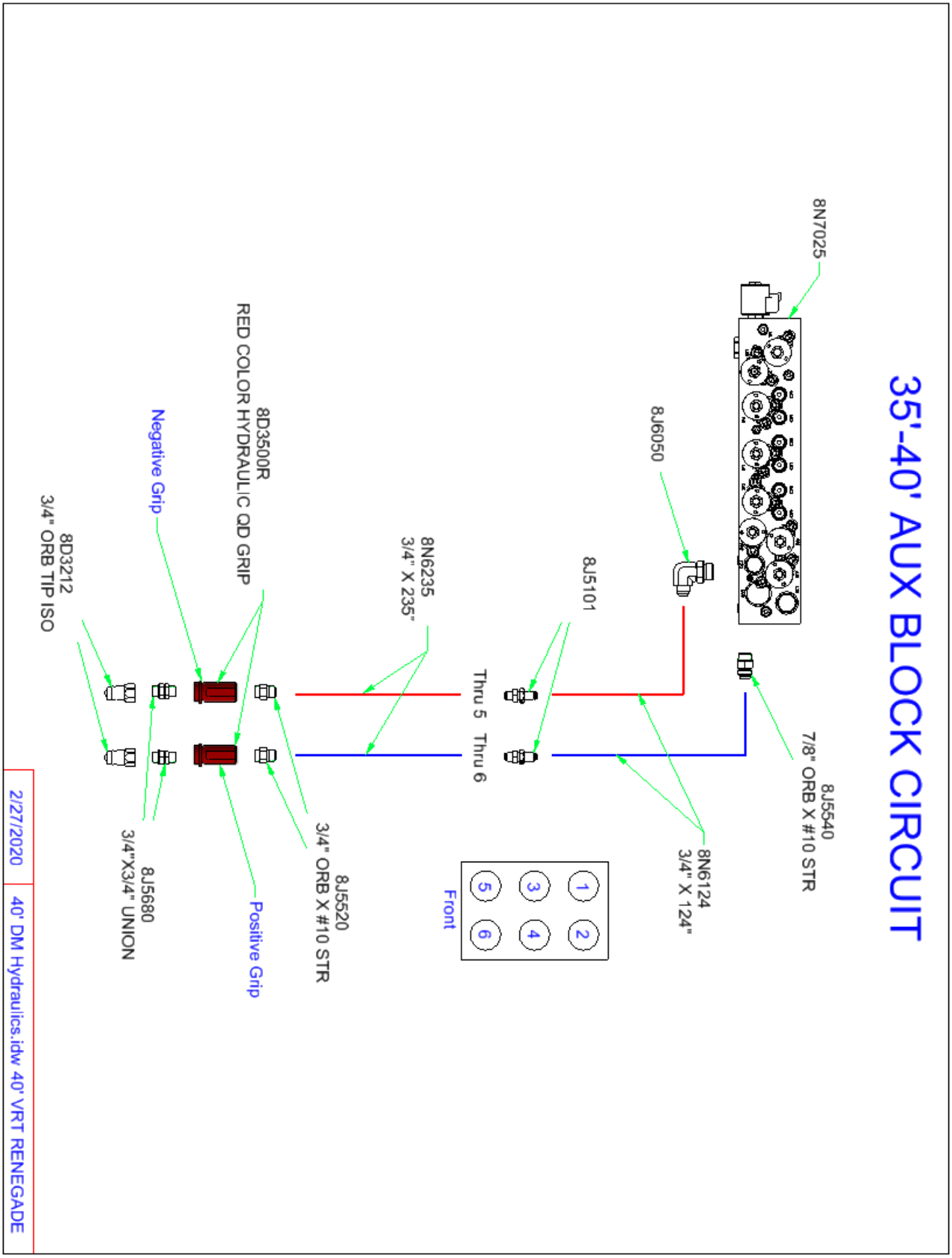
35'-40' AUX BLOCK CIRCUIT
8N7025
8J5540
7/8" ORB X #10 STR
8J6050
8N6124
3/4" X 124"
8J5101
Thru 5
Thru 6
Front
1
2
3
4
5
6
8N6235
3/4" X 235"
8D3500R
RED COLOR HYDRAULIC QD GRIP
8J5520
3/4" ORB X #10 STR
Negative Grip
Positive Grip
8D3212
3/4" ORB TIP ISO
8J5680
3/4"X3/4" UNION
2/27/2020
40' DM Hydraulics.idw 40' VRT RENEGADE

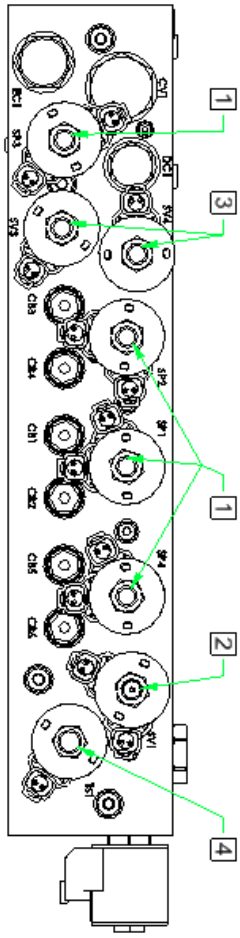

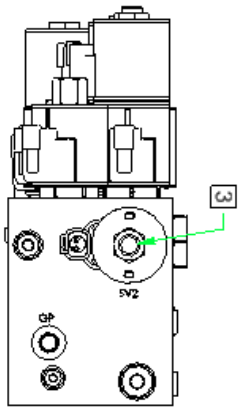

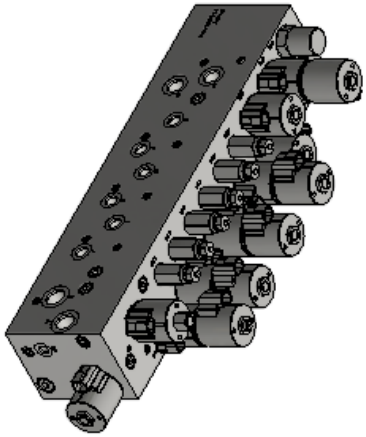

ITEM	COIL	CARTRIDGE	TOP SEAL	TOP SEAL SIZE	CARTRIDGE TORQUE (FT-LBS)	COIL NUT TORQUE (FT-LBS)
1	BL1471	8N8015	8N8096	-912	45	8
2	BL1471	8N8020	8N8096	-912	37	8
3	BL1471	8N8025	8N8095	-910	40	8
4	BL1471	8N8040	8N8096	-912	37	8
5	BL1471	8N8090	8N8097	-916	125	8

4/9/2021

8N7025.iam/

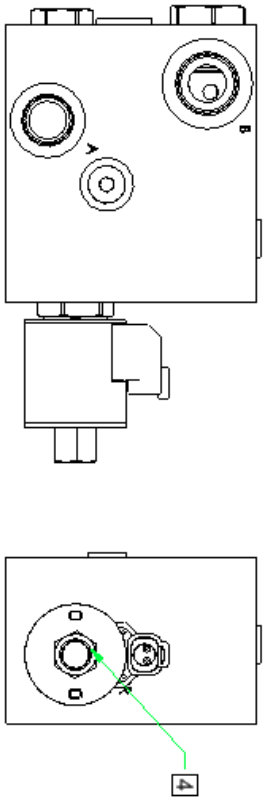

ITEM	COIL	CARTRIDGE	TOP SEAL	TOP SEAL SIZE	CARTRIDGE TORQUE (FT-LBS)	COIL NUT TORQUE (FT-LBS)
1	8L1471	8N8015	8N8096	-912	45	8
2	8L1471	8N8020	8N8096	-912	37	8
3	8L1471	8N8025	8N8095	-910	40	8
4	8L1471	8N8040	8N8096	-912	37	8
5	8L1471	8N8090	8N8097	-916	125	8

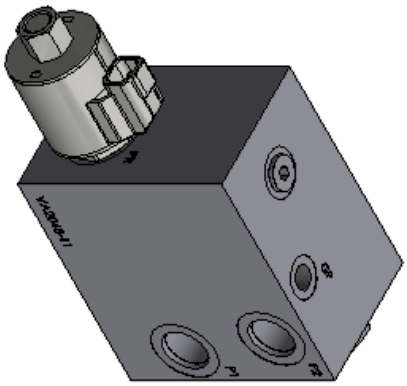

4/9/2021

8N7030.iam/

ITEM	COIL	CARTRIDGE	TOP SEAL	TOP SEAL SIZE	CARTRIDGE TORQUE (FT-LBS)	COIL NUT TORQUE (FT-LBS)
1	8L1471	8N8015	8N8096	-912	45	8
2	8L1471	8N8020	8N8096	-912	37	8
3	8L1471	8N8025	8N8095	-910	40	8
4	8L1471	8N8040	8N8096	-912	37	8
5	8L1471	8N8090	8N8097	-916	125	8

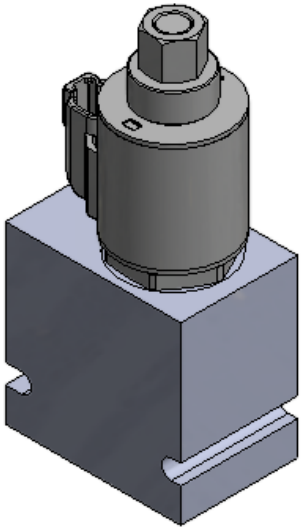

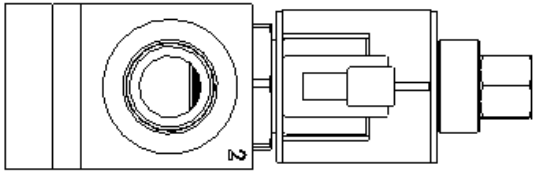

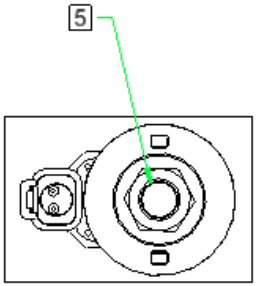

4/9/2021 | 8N7020.ipt/